9.6

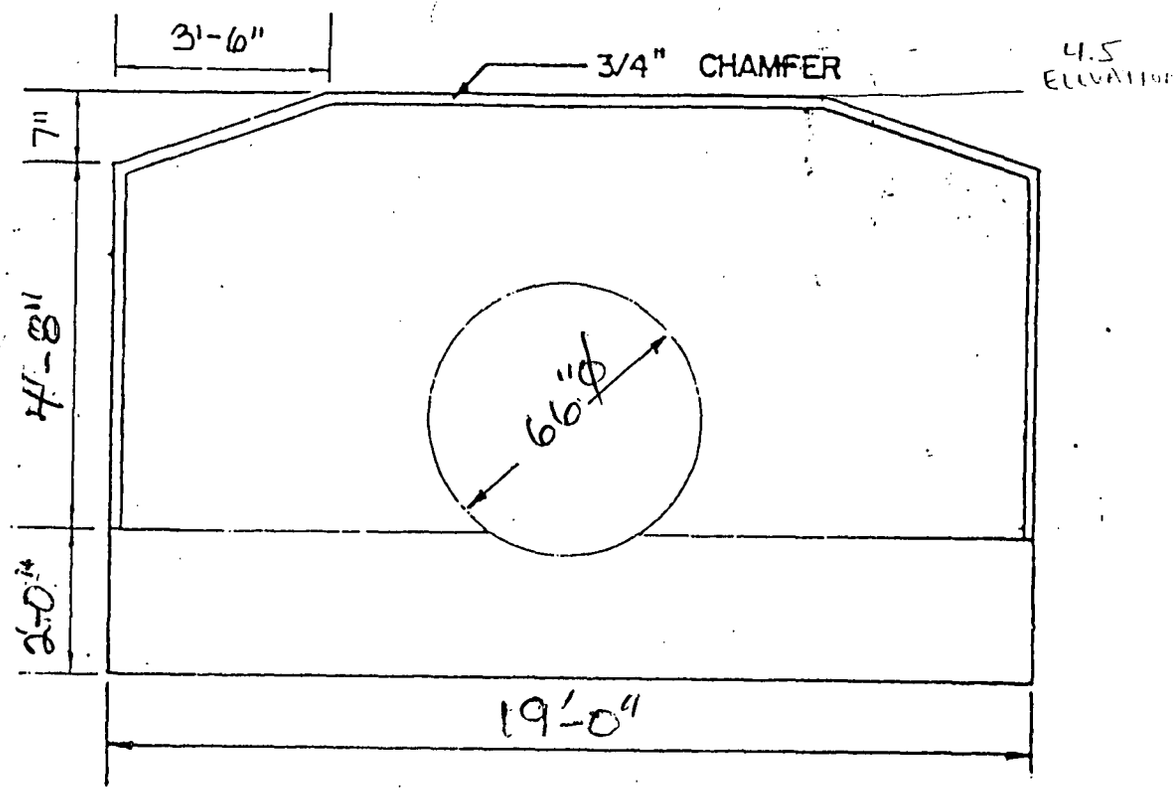

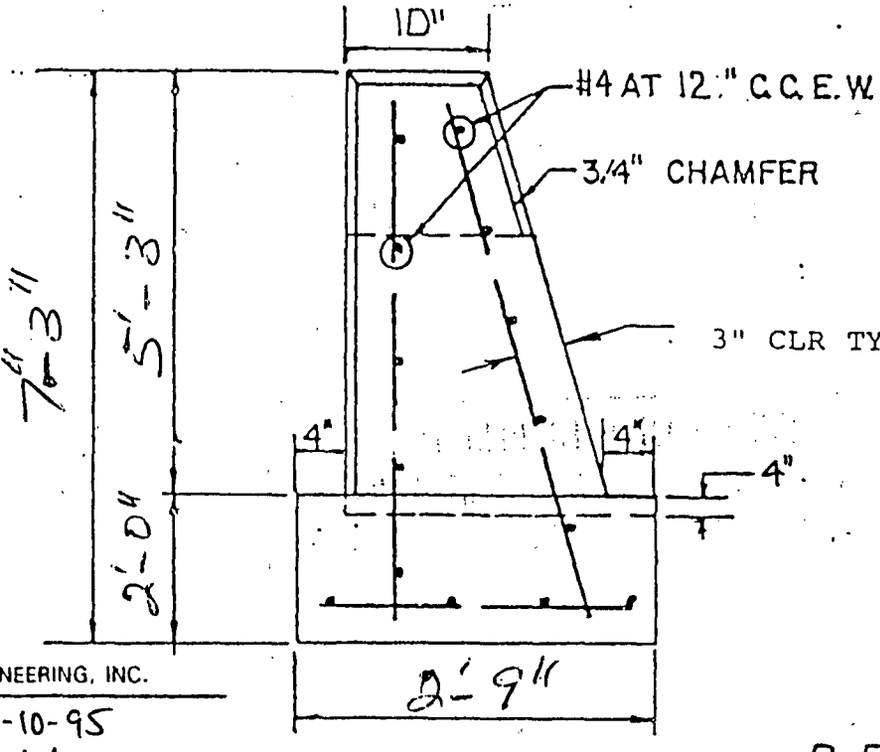

LASER ENGINEERING, INC.

DATE: 10-10-95

INITIALS: KB

3.26 C.Y

STRAIGHT ENDWALL
48" RCP
96-079

LASER ENGRG
NW 15TH St.

TRI-COUNTY · CONCRETE · PRODUCTS

1926 SKEES ROAD, WEST PALM BEACH, FLORIDA, 33411 (407) 686-4622

TYPE "C" CATCH BASIN

NO.	
ELEV.	
INV.	
HT.	
CUT	
PRICE	

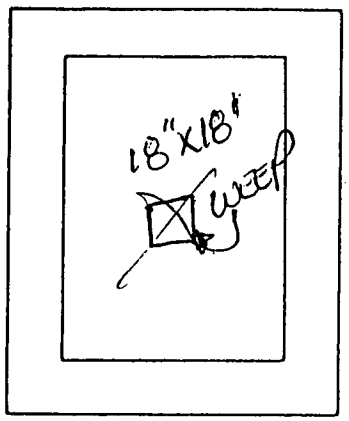

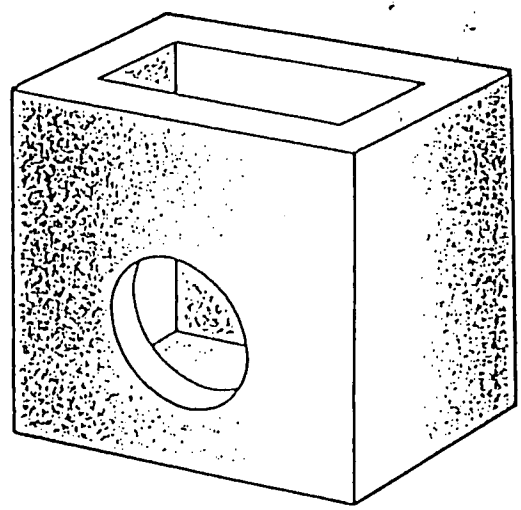

NO WeepHoles

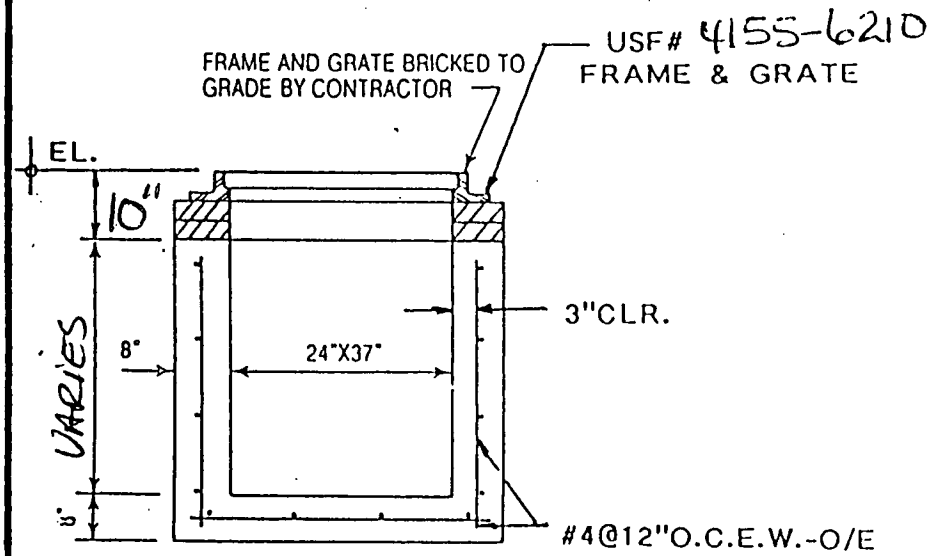

	DATE MADE	DATE SHIPPED
BASE		
RISER		
RISER		
COLLAR		
TOP		
USF#		

GENERAL NOTES

4000 PSI @ 28 DAYS

TYPE II CEMENT

INLET CONFORMS TO F.D.O.T.

INDEX 232

18" Sump

96-029

TYPICAL 30, 38, 32, 33, 34, 35
STR# 1, 2, 6, 7, 8, 9, 10, 12, 14, 15, 17, 18, 19, 23, 29,

"C" INLET-FRAME&GRATE

CONTRACTOR: LASER ENGRG

JOB: N.W. 15TH ST.

1926 SKEES ROAD, WEST PALM BEACH, FLORIDA, 33411 (407) 686-4622

NO.	
ELEV.	
INV.	
HT.	
CUT	
PRICE	

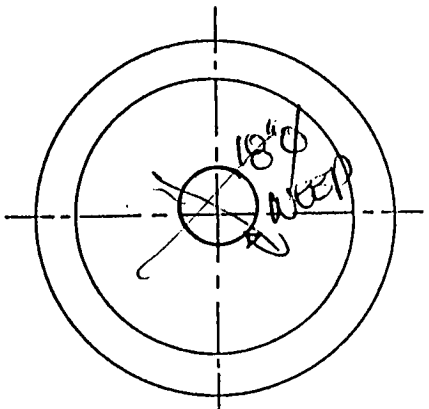

No weeps

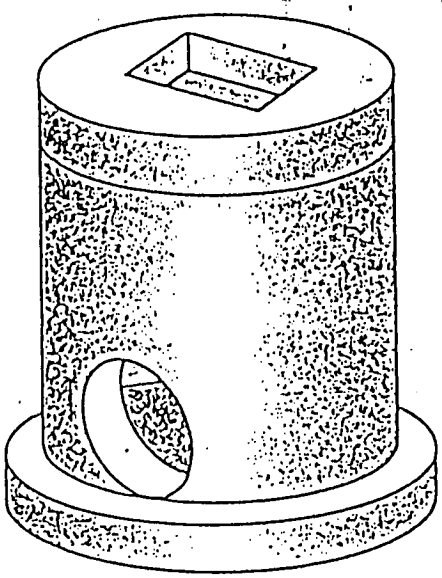

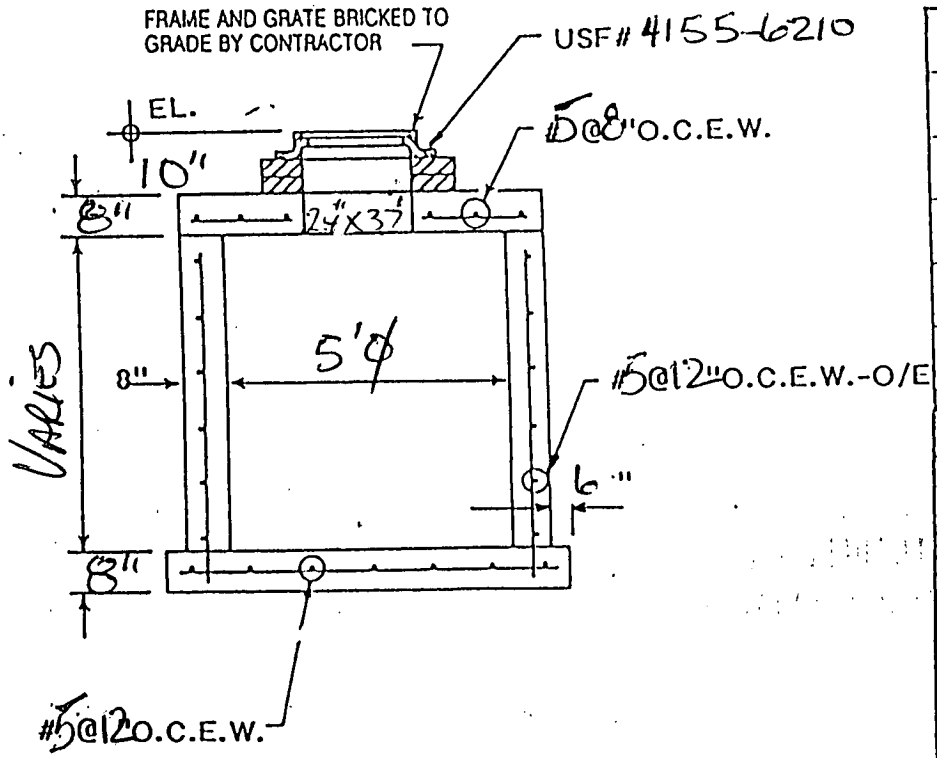

BASE	DATE MADE	DATE SHIPPED
RISER		
RISER		
COLLAR		
TOP		
USF#		

GENERAL NOTES

4000 PSI @ 28 DAYS

TYPE II CEMENT

18" Samp

96-079

TYPICAL STR# 3, 16, 20

I.D.-STORM INLET

CONTRACTOR: LASER ENGR

JOB: N.W. 15TH. St.

TRI-COUNTY CONCRETE PRODUCTS

1926 SKEES ROAD, WEST PALM BEACH, FLORIDA, 33411 (407) 686-4622

NO.	
ELEV.	
INV.	
HT.	
CUT	

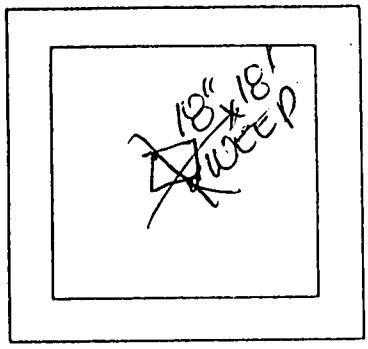

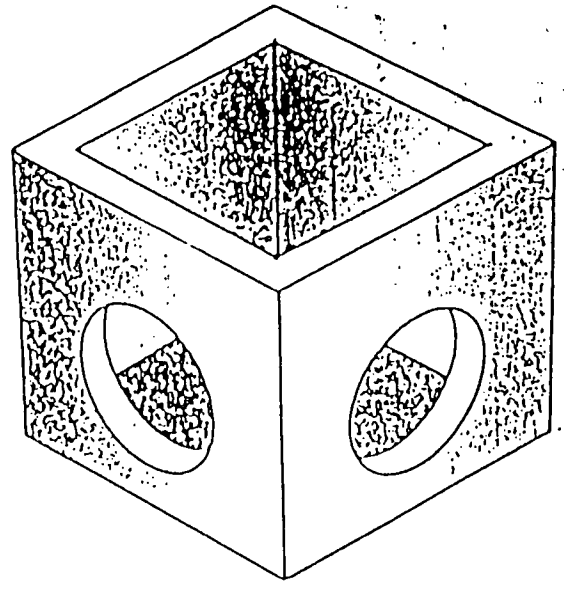

No Weeps

USF 4155-6210

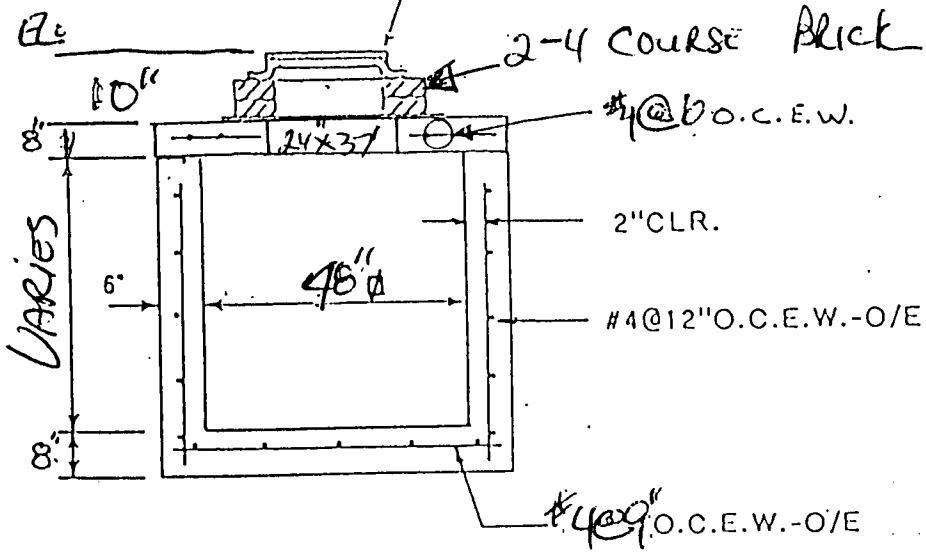

	DATE MADE	DATE SHIPPED
BASE		
RISER		
RISER		
COLLAR		
TOP		
USF		

GENERAL NOTES

4000 PSI @ 28 DAYS

TYPE II CEMENT

CONFORMS TO F.D.O.T.

INDEX 200&201

18" Samp.

96-079

Typical STR. #36

48" ø CATCH BASIN

CONTRACTOR: LASER ENGR

JOB: N.W. 15TH ST.

TRI-COUNTY · CONCRETE · PRODUCTS

1926 SKEES ROAD, WEST PALM BEACH, FLORIDA, 33411 (407) 686-4622

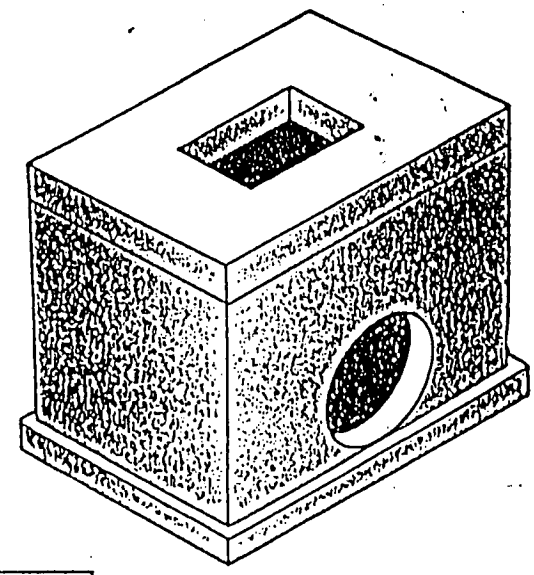

NO.	
ELEV.	
INV.	
HT.	
CUT	
PRICE	

NO WEEPS

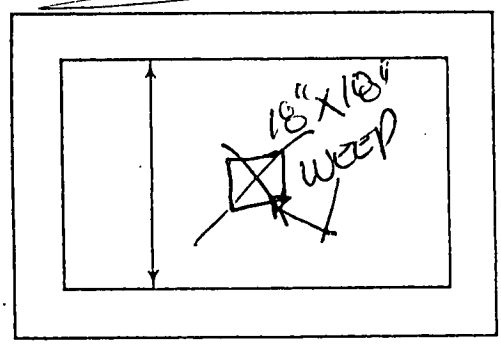

USF# 4155-6210

FRAME & GRATE BRICKED TO GRADE BY CONTRACTOR

2-4 COURSE BRICK

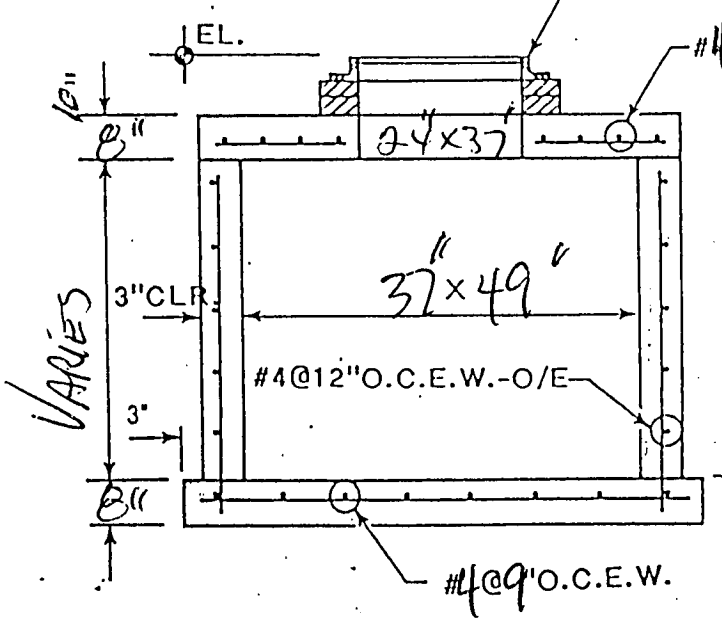

BASE	DATE MADE	DATE SHIPPED
RISER		
RISER		
COLLAR		
TOP		
USF#		

GENERAL NOTES

4000 PSI @ 28 DAYS

TYPE II CEMENT

CONFORMS TO F.D.O.T.

INDEXES 200 & 201

18' Temp

96-079

TYPICAL STR #5

"D" INLET

CONTRACTOR: LASER ENGR.

JOB: N.W 15th ST.

TRI-COUNTY · CONCRETE · PRODUCTS

1926 SKEES ROAD, WEST PALM BEACH, FLORIDA, 33411 (407) 686-4622

NO.	
ELEV.	
INV.	
HT.	
CUT	
PRICE	

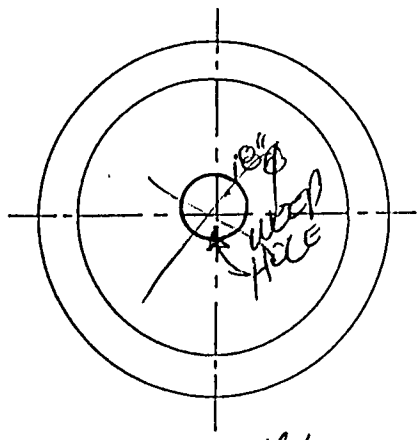

No weepholes

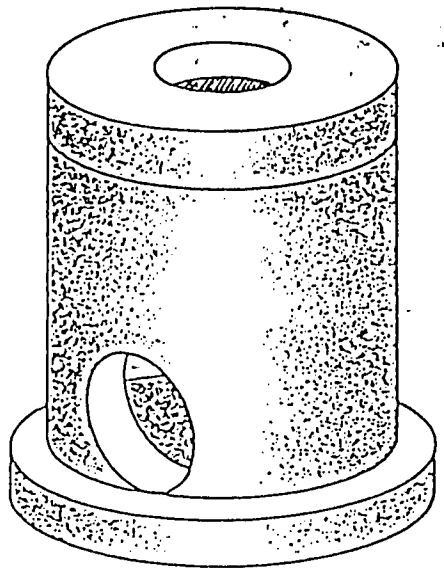

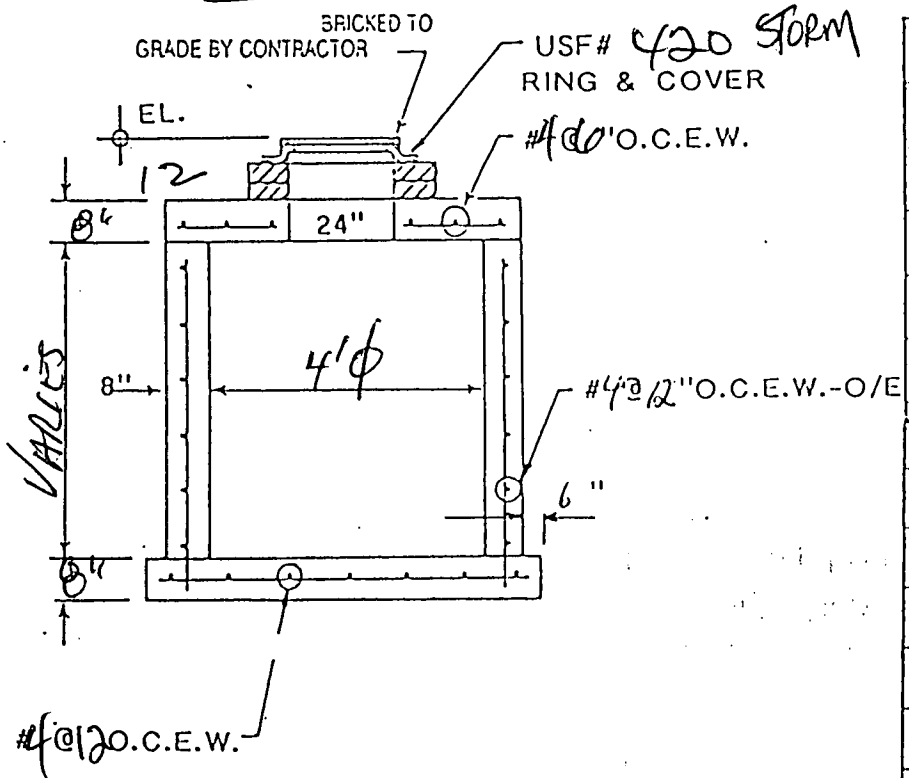

BASE	DATE MADE	DATE SHIPPED
RISER		
RISER		
COLLAR		
TOP		
USF#		

GENERAL NOTES

4000 PSI @ 28 DAYS

TYPE II CEMENT

18" Semp

96-079

Typical STD# 4, 21A, 11

I.D.-STORM

CONTRACTOR: CASOR ENGL

JOB: N.W 15TH. St

TRI-COUNTY · CONCRETE · PRODUCTS

1926 SKEES ROAD, WEST PALM BEACH, FLORIDA, 33411 (407) 686-4622

NO.	
ELEV.	
INV.	
HT.	
CUT	

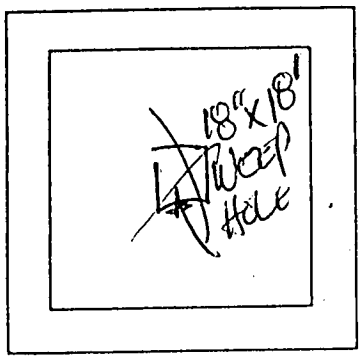

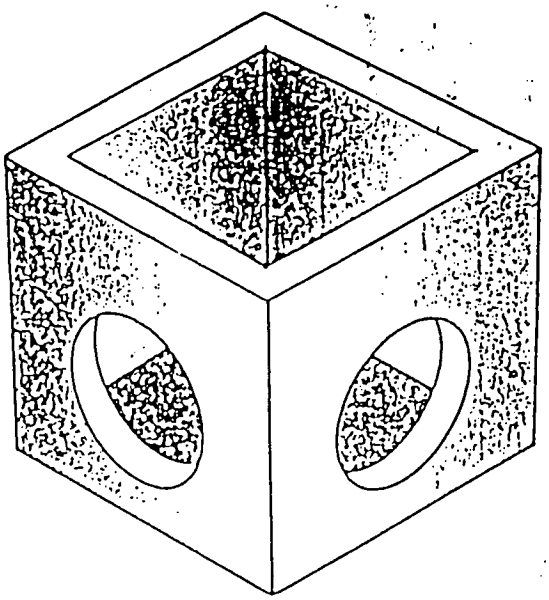

No Weep Holes

USF 420 R/C STORM

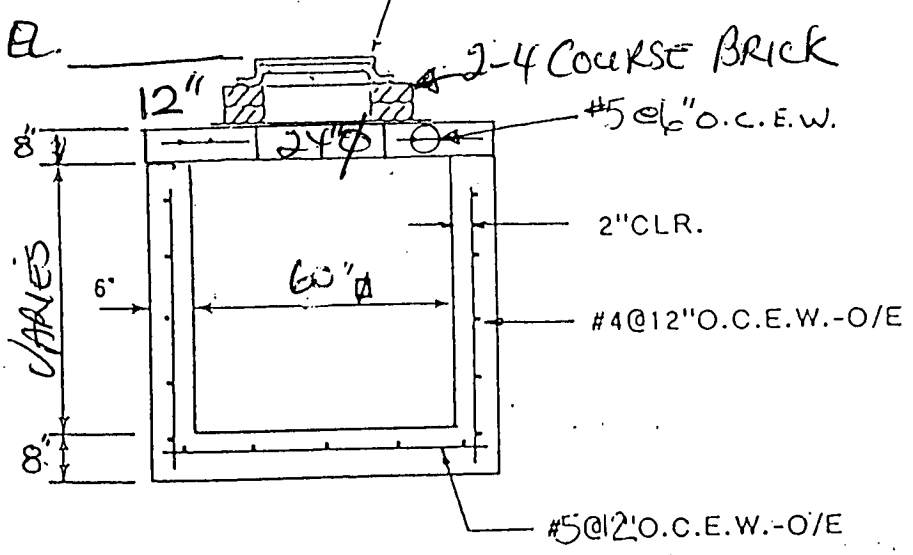

	DATE MADE	DATE SHIPPED
BASE		
RISER		
RISER		
COLLAR		
TOP		
USF		

GENERAL NOTES

4000 PSI @ 28 DAYS

TYPE II CEMENT

CONFORMS TO F.D.O.T.

INDEX 200&201

18" Scmp

96-079

TYPICAL 21, 37

60" ø CATCH BASIN

CONTRACTOR: LASER ENGR.

JOB: N.W. 15TH. ST

Category:

Paving & Drainage

Doc Type:

Plans & As-builts

CURVE NO 1
R = 826.00
D = 6°56'12"
Δ = 46°16'42"
L = 667.17'
T = 352.99
PT = 232+21.73

℄ INTERSECTION
STA 225 + 54.50
NW 12th STREET
STA 14 + 89.86
NW 155th AVE

TOWNGATE VILLAGE II
PROJECT No. 94567

STA 226 + 17.90
BEGIN CONSTRUCTION
THIS PROJECT

~~STA 229+00.00 25 L.T.~~
~~LOCATE AND REMOVE EX 8" DIP CAPPED~~
~~PLUG AND TEE IN BLOW OFF AND CONNECT~~
~~TO EX 8" MAIN.~~

25' LANDSCAPE BUFFER
UTILITY & DRAINAGE EASEMENT

R/W LINE

℄ CONSTRUCTION & SURVEY

223

225

5' Conc. Sidewalk

2' VALLEY GUTTER

SAWCUT & CONNECT
TO EX PAVEMENT

CURVE No 1

℄ BASELINE EXTENDED

MODIFIED TYPE
"D" CURB

63 LF
~~65~~ LF 15" RCP

0+99
533

8" DIP

2+682
ON LINE

CONNECT TO EX SIDEWALK
REFER TO ENGINEERS PROJECT
No 93503

8" W.M.

NW. 155th AVENUE

~~INSTALL 15" MITERED~~
~~CANNON FAN FLOODGATE~~

~~STA 229+00.00 25 L.T.~~
~~LOCATE AND REMOVE EX 8" DIP CAPPED~~
~~IN THE ANY 8" TEE IN BLOW OFF AND CONNECT~~
~~TO EX 8" MAIN W/ 8"x8" TEE~~
~~TAPPING SLEEVE AND VALVE~~
~~FIRE HYDRANT, VALVE AND 6" L.F.~~
STA 2+66.7, 94L
GATE VALVE, STA 2+64.1, 25L

24.3 L.F.
~~25~~ L.F. 15" RCP

SEWER UNDER DRAINAGE
~~STA 229+09.32 L.T.~~
1-8"x45° BEND
0+67 5.0 R
~~STA 229+06.26 L.T.~~
1-8"x45° BEND
0+149.19

FIN GR	DRA	WATER
5.5	4.95	~~9.35~~

FOR CONTINUATION SEE SHEET # 2 OF 5

SOUTH BROWARD DRAINAGE DISTRICT
APPROVED
AS - BUILT
BY: _____ DATE: 3/1/2000

SCALE 1"=20'

(2) ~~STA 229+00.00 25 L.T.~~
TYPE "C" INLET
W/ SPECIAL GRATE
TOP TO BE INSTALLED
~~8"x 8" NOZ. 30.4°x 8.3°~~
~~48" NOZ. W 23.1° x~~
~~INV. NOZ. 3.97~~
~~INV. 2.70~~

(3) ~~STA 229+00.00 25 L.T.~~
~~TYPE "C" INLET~~
~~W/ SPECIAL GRATE~~
~~INV. NOZ. S 5.46~~
~~INV. N 4.79~~
~~INV. E 4.68~~
~~INV. W 4.04~~

(6) ~~STA 229+00.00 25 L.T.~~
TYPE "P" INLET
W/ BOLTED FRAME IN GRATE
W/ 2 CONCRETE APRON
PER INDEX No 292
~~NE INV. 5.45~~
~~SE INV. 4.79~~

NOTE BENCHMARK BROWARD COUNTY ENGINEERING BENCHMARK ~~DATUM~~ ELEVATION ~~1929 M.S.L.~~

STA. 226+07.90
BEGIN CONSTRUCTION
THIS PROJECT

P.I. STA. 54+56
F.G. 8

1.10.4%

EX. BLOW OFF

EX. 8" F.M.

8" F.M.

P.I. STA. 229+00
F.G. 6.00

15" RCP

24" RCP

TOP 4.050

8" F.M.

SKETCH OF AS-BUILT SURVEY

CERTIFICATE: I hereby certify that the above sketch correctly represents a survey made under my direction and that said survey meets the minimum technical standards for land surveying in the State of Florida (Chapter 61G17, Florida Administrative Code).

Roger A. Dietz
P.L.S. No. 4081
State of Florida

not valid without embossed seal

Note: This instrument is not intended to reflect all easements, rights-of-way or similar matters obtainable through qualified title verification.

DIETZ & DIETZ LAND SURVEYORS, INC.
1224 N. University Dr., Plantation, Florida 33322
(305) 475-7147

RECORD DRAWING

FOR: MINTO
DATE:
ORDER NO.:
FIELD BOOK:

DATE	REVISION	ORDER NO.

DATE	REVISIONS
~~9/16/95~~	~~REMOVE MH NO 1 & RELOCATE DRAIN NO 2~~
~~9/20/95~~	~~REVISE PER CITY COMMENTS~~
~~9/11/95~~	~~ADD SIDEWALK TO WEST R/W~~

DATE	REVISIONS
~~6-27-96~~	~~ADD STATIONS AND OFFSET TO F.H.~~

DESIGNED GSB DATE 11-96
DRAWN KFM DATE 11-96
CHECKED DATE

TOWNGATE
MINTO COMMUNITIES (PEMBROKE), INC. - GENERAL PARTNER

N.W. 15th. STREET
STA. 226+07.90 TO STA. 229+00.00

WINNINGHAM & FRADLEY, INC.
ENGINEERS - PLANNERS - SURVEYORS

APPROVED
DATE
PROJECT NUMBER 94552
SHEET W91 OF 5

DEC 16 1999

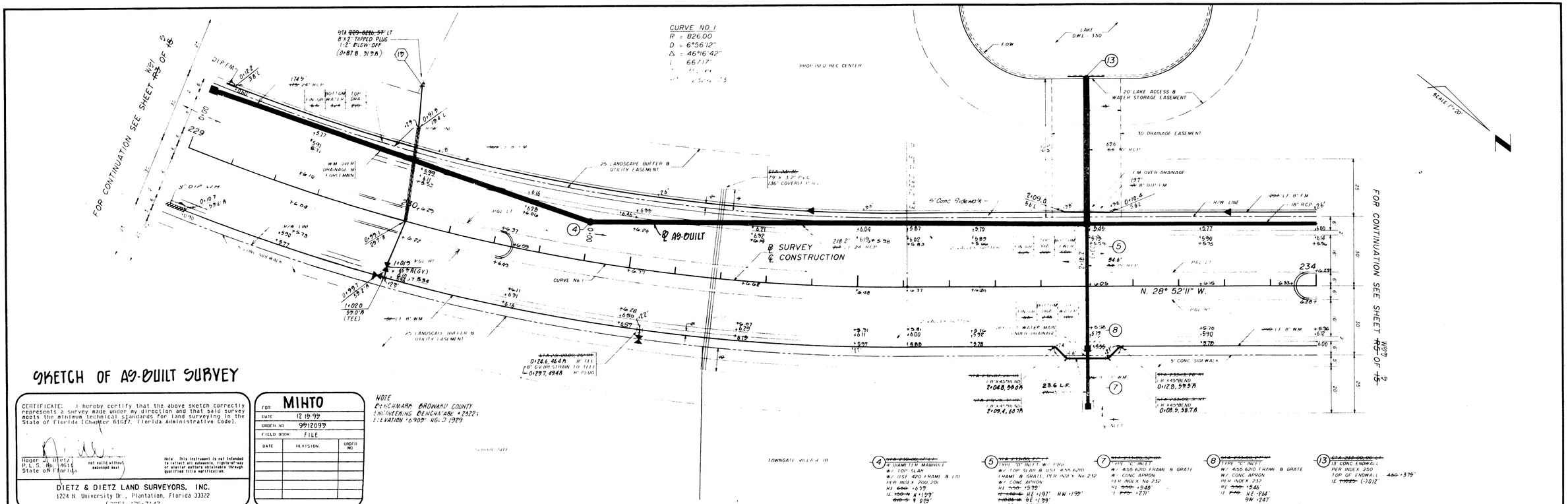

SKETCH OF AS-BUILT SURVEY

CERTIFICATE: I hereby certify that the above sketch correctly represents a survey made under my direction and that said survey meets the minimum technical standards for land surveying in the State of Florida (Chapter 61G17, Florida Administrative Code).

Roger J. Dietz
P.L.S. No. 4611
State of Florida

not valid without embossed seal

Note: This instrument is not intended to reflect all easements, rights-of-way or similar matters obtainable through qualified title verification.

DIETZ & DIETZ LAND SURVEYORS, INC.
1224 N. University Dr., Plantation, Florida 33322
(305) 475-7147

FOR:	MINTO
DATE:	12-19-99
ORDER NO:	9912099
FIELD BOOK:	FILE

DATE	REVISION	ORDER NO

NOTE
BENCHMARK BROWARD COUNTY ENGINEERING BENCHMARK #2322; ELEVATION +6905' NG.D 1929

RECORD DRAWING

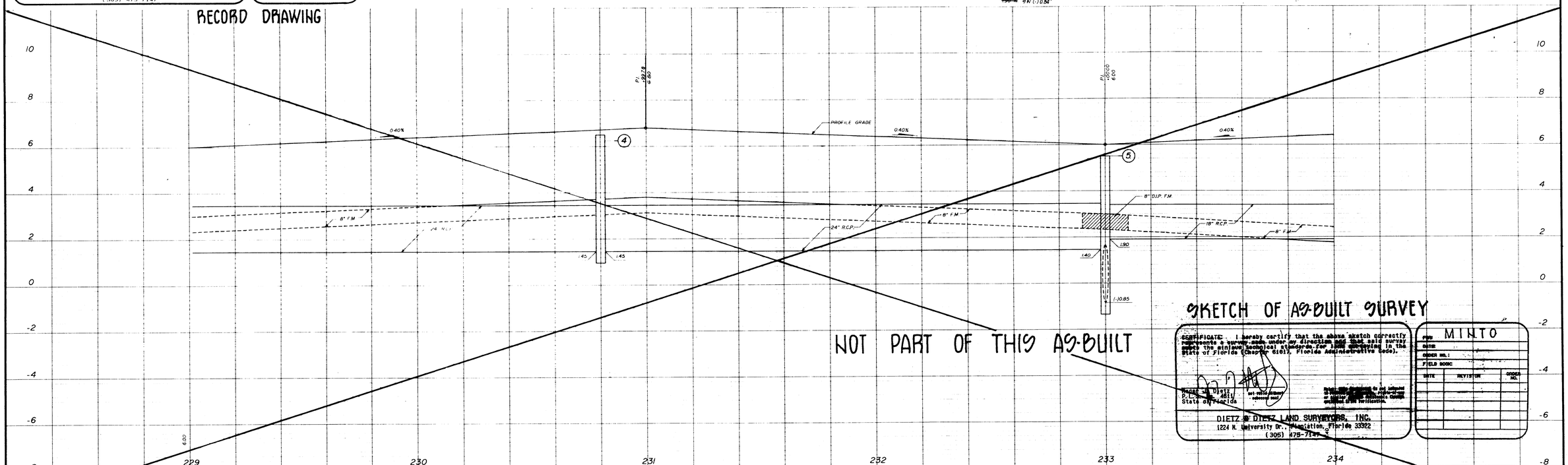

NOT PART OF THIS AS-BUILT

SKETCH OF AS-BUILT SURVEY

CERTIFICATE: I hereby certify that the above sketch correctly represents a survey made under my direction and that said survey meets the minimum technical standards for land surveying in the State of Florida (Chapter 61G17, Florida Administrative Code).

Roger J. Dietz
P.L.S. No. 4611
State of Florida

not valid without embossed seal

Note: This instrument is not intended to reflect all easements, rights-of-way or similar matters obtainable through qualified title verification.

DIETZ & DIETZ LAND SURVEYORS, INC.
1224 N. University Dr., Plantation, Florida 33322
(305) 475-7147

FOR:	MINTO
DATE:	
ORDER NO.:	
FIELD BOOK:	

DATE	REVISION	ORDER NO.

DATE	REVISIONS	DATE	REVISIONS
~~6-28-95~~	~~ADD CROSSING DATA AND DIP TO WM~~	~~10/16/95~~	~~Remove MH#1 & Relocate Basin #2~~
~~6-27-95~~	~~ADD DRAINAGE EASEMENT PER PPED.~~	~~9/11/95~~	~~Add Sidewalk to West R/W~~
~~5-24-95~~	~~ADD FPL CROSSINGS~~	~~8/28/96~~	~~REVISE HIGHPT. EL 76 TO 6.80~~

DESIGNED: G.S.B. DATE: 11-94
DRAWN: K.P.R. DATE: 11-94
CHECKED: DATE:

TOWNGATE
MINTO COMMUNITIES (PEMBROKE), INC. - GENERAL PARTNER

N.W. 15th. STREET
STA. 229+00.00 TO STA. 234+00.00

WINNINGHAM & FRADLEY, INC.
ENGINEERS • PLANNERS • SURVEYORS

APPROVED:
DATE:
PROJECT NUMBER 94552
SHEET W9 2 OF 5

DEC 16 1999

TOWNGATE VILLAGE 12B

SCALE 1"=20'

FOR CONTINUATION SEE SHEET ~~#4~~ OF ~~15~~

FOR CONTINUATION SEE SHEET ~~#6~~ OF ~~15~~

25' LANDSCAPE BUFFER, UTILITY & DRAINAGE EASEMENT

5' Conc Sidewalk

AS-BUILT

AS-BUILT BASELINE

℄ SURVEY ℄ CONSTRUCTION

N. 28° 52' 11" W.

TRANSITION TO 5' VALLEY GUTTER

TRANSITION TO 2' VALLEY GUTTER

24.6 L.F. 15" RCP

25.6 L.F. 15" RCP

540 L.F. 15" RCP

2+997, 527.8' 8"x45° BEND

3+042, 96.8' 8"x45° BEND

2+021, 349.1' 8"x45° BEND

2+126, 98.1' 8"x45° BEND

2+188, 92.1' 8"x45° BEND

2+049 40.0' 8"x45° BEND

2+089 49.7' 8"x45° BEND

2+109.0 49.7' 8"x45° BEND

2+109.0 42.8' 8"x45° BEND

2+109.0 55.9' 8"x45° BEND

2+126, 98.1' 8"x45° BEND

2+188, 92.1' 8"x45° BEND

2+619 8"x8" CROSS W/ 8" PLUG

8" DIP F.M.

8" PVC W.M.

8" W.M. UNDER WATER

8" F.M.

8" W.M.

8" PVC F.M.

8" PVC W.M.

8" PVC F.M.

8" PVC W.M.

8" PVC W.M.

8" PVC F.M.

8" PVC W.M.

8" PVC F.M.

8" PVC W.M.

8" PVC F

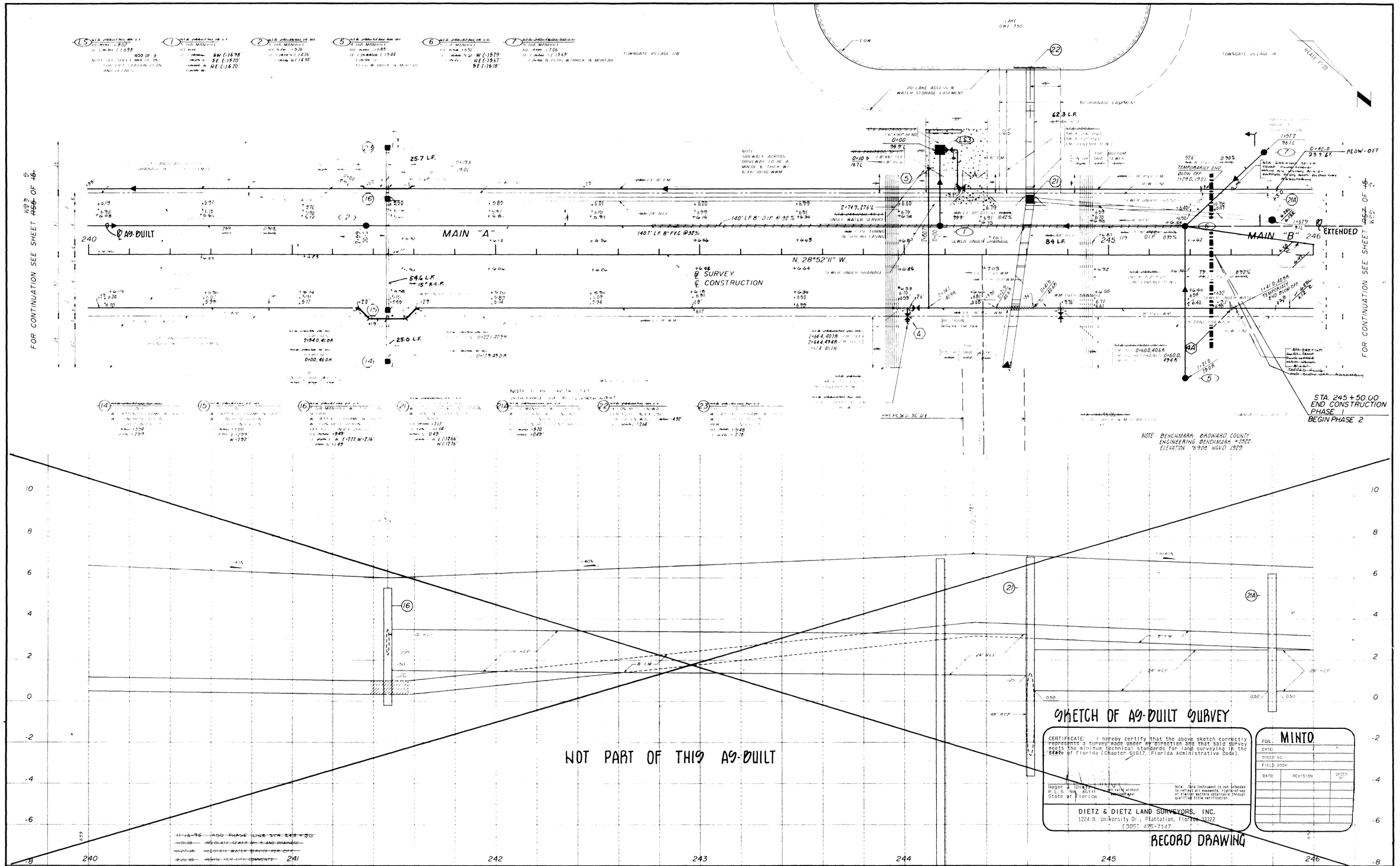

FOR CONTINUATION SEE SHEET W93 OF 5
MAIN "A"
MAIN "B"
N. 28°52'11" W.
℄ SURVEY
℄ CONSTRUCTION
℄ AS-BUILT
℄ EXTENDED
25.7 L.F.
54.6 L.F.
25.0 L.F.
62.3 L.F.
84 L.F.
140' L.F. 8" DIP @ 92%
140' L.F. 8" PVC @ 92%
TEMPORARILY END BLOW OFF
BLOW-OFF
STA. 245+50.00
END CONSTRUCTION
PHASE 1
BEGIN PHASE 2
NOTE: BENCHMARK: BROWARD COUNTY ENGINEERING BENCHMARK #2322. ELEVATION 6.903' NGVD 1929.
NOT PART OF THIS AS-BUILT
SKETCH OF AS-BUILT SURVEY
CERTIFICATE: I hereby certify that the above sketch correctly represents a survey made under my direction and that said survey meets the minimum technical standards for land surveying in the State of Florida (Chapter 61G17, Florida Administrative Code).
Roger J. Dietz
P.L.S. No. 4611
State of Florida
Not valid without Registered Seal
Note: This instrument is not intended to reflect all easements, rights-of-way or similar matters obtainable through qualified title verification.
DIETZ & DIETZ LAND SURVEYORS, INC.
1224 N. University Dr., Plantation, Florida 33322
(305) 475-7147
RECORD DRAWING
FOR: MINTO
DATE:
ORDER NO.:
FIELD BOOK:
DATE
REVISION
ORDER NO.
11-13-95 ADD PHASE LINE STA. 245+50
11-01-95 RELOCATE SEWER MH 5 AND DRAINAGE
10-27-95 RELOCATE WATER SERVICE PER CITY
9-20-95 REVISE PER CITY COMMENTS
6-28-95 ADD DRAINAGE EASEMENT PER FPLB
6-27-95 REVISE PER COPPUD
5-24-95 ADD FPL CROSSINGS
9-11-95 ADD SIDEWALK TO WEST R/W
9-06-95 REVISE PER CITY
8-25-95 REVISE PER COPPUD
DATE
REVISIONS
DESIGNED GSB
DRAWN KPR
CHECKED
TOWNGATE
MINTO COMMUNITIES (PEMBROKE), INC. - GENERAL PARTNER
N.W. 15th. STREET
STA. 240+00.00 TO STA. 246+00.00
WINNINGHAM & FRADLEY, INC.
ENGINEERS • PLANNERS • SURVEYORS
APPROVED
PROJECT NUMBER 94552
SHEET W94 OF 5
DEC 16 1999

RECEIVED
FEB 1 0 2000
BY:

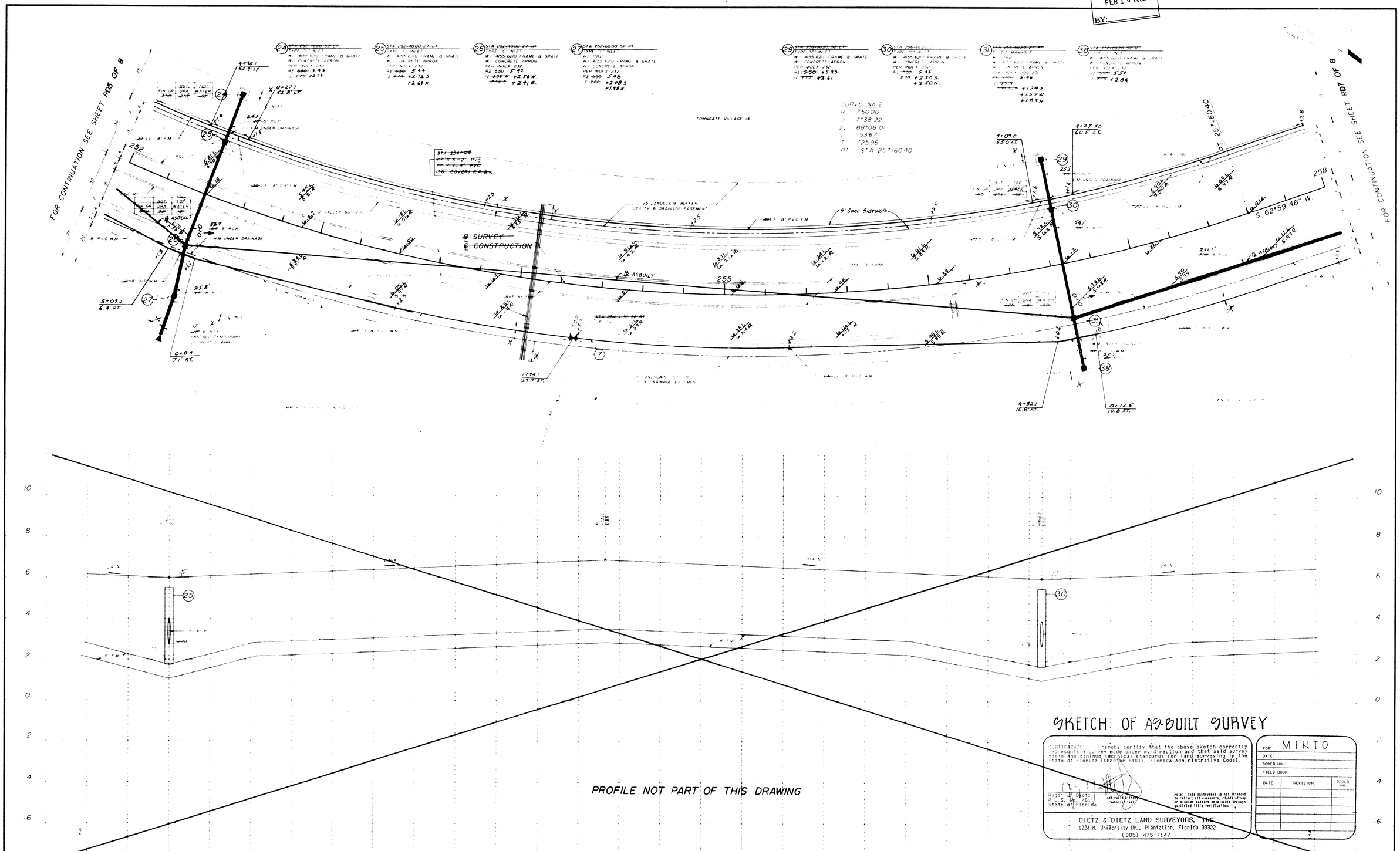

SKETCH OF AS-BUILT SURVEY

CERTIFICATE: I hereby certify that the above sketch correctly represents a survey made under my direction and that said survey meets the minimum technical standards for land surveying in the State of Florida (Chapter 61G17, Florida Administrative Code).

Roger J. Dietz
P.L.S. No. 4611
State of Florida

not valid without embossed seal

Note: This instrument is not intended to reflect all easements, rights-of-way or similar matters obtainable through qualified title verification.

DIETZ & DIETZ LAND SURVEYORS, INC.
1224 N. University Dr., Plantation, Florida 33322
(305) 475-7147

FOR: MINTO
DATE:
ORDER NO.:
FIELD BOOK:

DATE	REVISION	ORDER NO.

DATE	REVISIONS
4/8/96	LEVEL STATIONING #28 R/M ELEV
9/11/96	ADD SIDEWALK TO KEEL R/W
1	ADD F.P.&L. CROSSING

5/24/95

TOWNGATE
MINTO COMMUNITIES (PEMBROKE), INC. - GENERAL PARTNER

N.W. 15th. STREET
STA. 252+00.00 TO STA. 258+00.00

WINNINGHAM & FRADLEY, INC.
ENGINEERS • PLANNERS • SURVEYORS

PROJECT NUMBER 94552 SHEET RD6 OF 8

FEB 07 2000

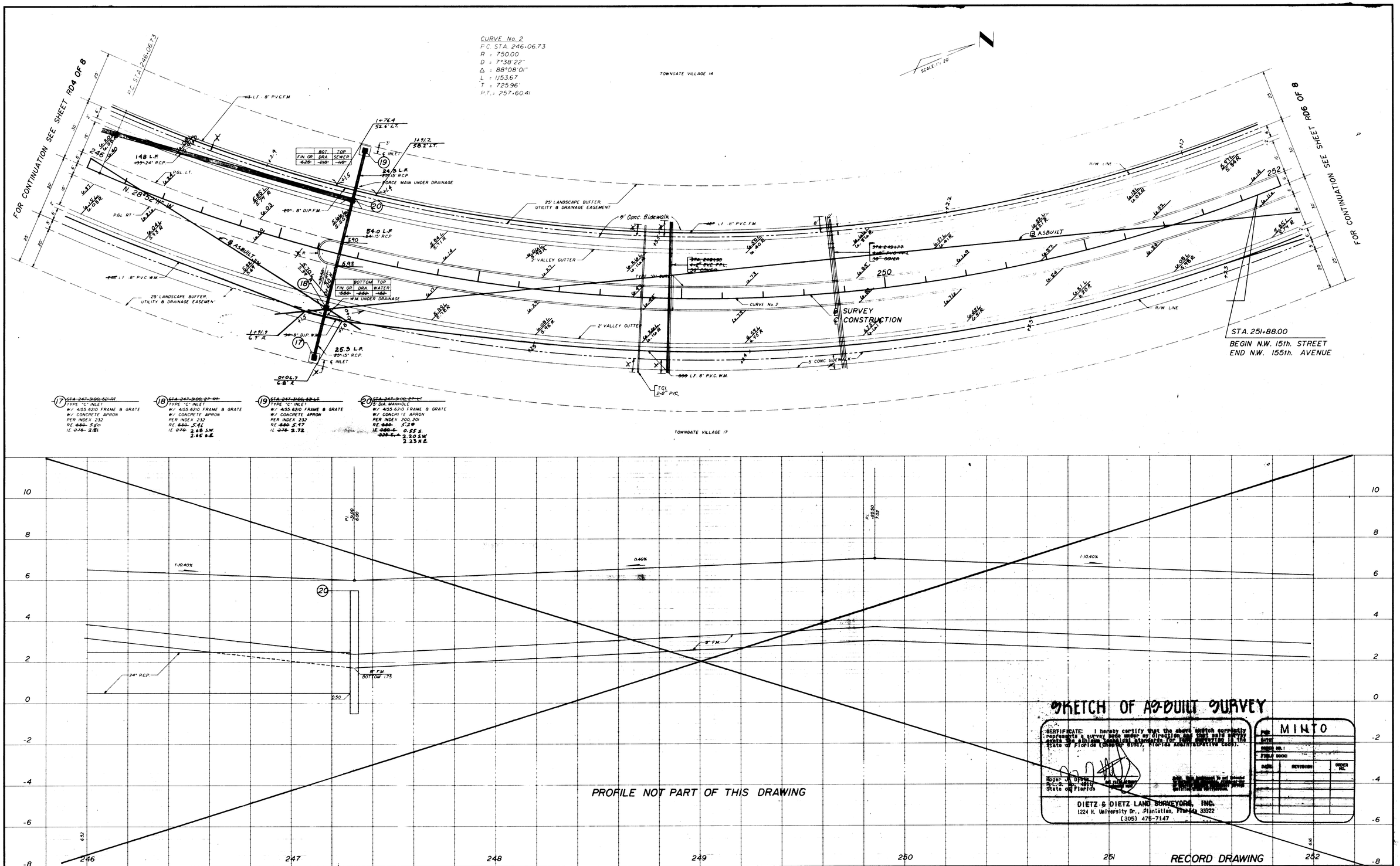

DATE	REVISIONS	DATE	REVISIONS
~~2/2/96~~	~~ADD FPL & TCI CROSSING~~		
~~9/11/96~~	~~Add Sidewalk to West R/W~~		
~~6-27-95~~	~~ADD CHANGE FROM 155th STREET TO 15th STREET~~		

DESIGNED: G.S.B. DATE: 11-94
DRAWN: K.P.R. DATE: 11-94
CHECKED: DATE:

TOWNGATE
MINTO COMMUNITIES (PEMBROKE), INC. - GENERAL PARTNER

N.W. 15th. STREET
STA. 246+00.00 TO STA. 252+00.00

WINNINGHAM & FRADLEY, INC.
ENGINEERS • PLANNERS • SURVEYORS

APPROVED:
DATE:
PROJECT NUMBER 94552
SHEET RD5 OF 8

DEC 16 1999

FOR CONTINUATION SEE SHEET RD6 OF 8

FOR CONTINUATION SEE SHEET RD8 OF 8

SCALE 1"=20'

STA 259+23.00, 33' LT.
INSTALL BRICK & MORTAR PLUG
AT I.E. 11.290

STA 258+61.00, 52' LT.
1-8"X2" TAPPED PLUG
1-2" BLOW OFF

STA 259+37.00, 28' LT.
1-8" TEE
1-8" GV

STA 259+37.62 LT.
8"X2" TAPPED PLUG
2" BLOW OFF

STA 259+46
36" 5.2' P.V.C.
(36" COVER) F. P. & L.

STA 258+77.33 LT.
18.4' x 90° BEND

STA 258+33
54.4' x 90° P.V.C.
(36" COVER) F. P. & L.

37 LF 8" PVC F.M.

TRANSITION FROM TYPE "F" CURB & GUTTER TO VALLEY GUTTER

CONSTRUCT CURB CUT RAMP PER FDOT INDEX 304

CONSTRUCT CURB CUT RAMP PER FDOT INDEX 304

8" P.V.C. W.M.

83.2' 48" R.C.P.

20 LF 8" D.I.P. F.M.

25 LF 8" D.I.P. W.M.

8" R.C.P.

2-8"x45° BENDS

8" P.V.C. W.M.

18" 8" P.V.C. W.M.

2-4" P.V.C. RESTRAIN GV TO CROSS

RESTRAIN GV TO TEE

34.1' 48" R.C.P.

2+16.5 72 RT. END DIR

STA 259+37.38, 45° BEND
8" PLUG

2+18.4 40 RT. B.O.

2+03.4 10.5' RT. G.V.

2+13.7 11.0 RT. 45° BEND

0+13.8 45.8 RT. B.O.

0+22.3 23.7 RT. TEE

0+15.7 23.7 RT. G.V.

0+19.1 23.7 RT. TEE

STA 259+37.38, 90°
1-8" TEE
2-8" GV'S

STA 259+37.54, 87°
1-8"x6" TEE
1-6" GV
1-FIRE HYDRANT (STA 259+45.54 RT.)
8"X2" TAPPED PLUG
2" BLOW OFF

STA 259+37.38, 87°
INSTALL BRICK & MORTAR PLUG
AT I.E. 11.290

0+19.5 6.9 RT. TEE

0+19.6 9.7 RT. G.V.

2+07.9 59.2 LT. D.I.P.

2+13.7 59.2 LT.

2+13.7 12.1 LT. D.I.P.

2+14.9 3.4 RT. D.I.P.

0+18.3 54.0 LT. G.V.

0+14.8 54.4' LT. TEE

0+14.5 53.2 LT. D.I.P.

0+19.7 4.1 RT. G.V.

2+37.6 377.7 LT. D&R

2+00.7 32.3' RT. B.O.

1+97.5 92.3 LT.

1+99.6 37 RT. G.V.

1+99.9 10.5' RT. B.O.

1+99.9 13.3 RT. G.V.

STA 258+61.00, 52' RT.
1-8"X2" TAPPED PLUG
1-2" BLOW OFF

STA 258+61.00, 36' RT.
1-8" CROSS
3-8" GV'S

STA 258+61.00, 54' RT.
1-8"X2" TAPPED PLUG
1-2" BLOW OFF

F.M. UNDER WATER MAIN

F.M. UNDER WATER MAIN

F.M. OVER DRAINAGE

8" D.I.P. W.M. OVER DRAINAGE

25' LANDSCAPE BUFFER, UTILITY & DRAINAGE EASEMENT

2' VALLEY GUTTER

Construct Curb Cut Ramp Per FDOT Index # 304

SBT 2-4" PVC.

SBT 2-4" PVC.

SBT 2-4" PVC.

S. 62°59'48" W.

℄ SURVEY

℄ CONSTRUCTION

℄ ASBUILT

℄ EXT.

218.5' 24" R.C.P.

191.2' 15" R.C.P.

25.2' 20" R.C.P.

53.3' 54" R.C.P.

25' LANDSCAPE BUFFER, UTILITY & DRAINAGE EASEMENT

5' Conc. Sidewalk

5' CONC. WALK

R/W LINE

TYPE "D" CURB

6' R

	TOP	BOT.
FIN. GR.	WATER	DRAIN.
565'	550'	550'

	TOP	BOTTOM
FIN. GR.	DRA.	WATER
647	521	330

	TOP	BOTTOM	BOTTOM
FIN. GR.	DRA.	WATER	F.M.
625'	571	550'	547'

TOWNGATE VILLAGE 14

TOWNGATE VILLAGE 15

TOWNGATE VILLAGE 16

(32) STA 263+88.39 RT. — TYPE "C" INLET
W/ 455 6210 FRAME & GRATE
W/ CONCRETE APRON
RIM 8.10
IE 5.82

(33) STA 256+40.01 — TYPE "C" INLET
W/ 455 6210 FRAME & GRATE
W/ CONCRETE APRON
PER F.D.O.T. INDEX 232
RIM 5.70
IE 2.60 N.
2.46 S.

(34) STA 258+40.01 — TYPE "C" INLET
W/ 455 6210 FRAME & GRATE
W/ CONCRETE APRON
PER F.D.O.T. INDEX 232
RIM 5.70
IE 2.60 N.
2.46 S.

(35) STA 256+40.01, 52' RT. — TYPE "C" INLET
W/ 455 6210 FRAME & GRATE
W/ CONCRETE APRON
PER F.D.O.T. INDEX 232
RIM 5.99
IE 2.78

(36) STA 261+08.01, 37' RT. — TYPE "J" BOX (48"X48")
W/ PRB
W/ TOP SLAB
W/ 455 6210 FRAME & GRATE
W/ CONCRETE APRON
PER F.D.O.T. INDEX 200
RIM 5.96
IE 0.40 E.
1.98 N.
1.55 S.
1.55 W.

(37) STA 258+33.00, 26' RT. — TYPE "J" BOX (60"X48")
W/ TOP SLAB
W/ USF 420 RING & LID
PER F.D.O.T. INDEX 200, 201
RIM 6.91
IE 8.00 E.
2.91 N.
3.06 S.
0.13 W.

PROFILE NOT PART OF THIS DRAWING

SKETCH OF AS-BUILT SURVEY

CERTIFICATE: I hereby identify that the above sketch correctly represents a survey made under my direction and that said survey meets the minimum technical standards for land surveying in the State of Florida (chapter 61G17, Florida Administrative Code).

Roger J. Dietz
P.L.S. No. 4611
State of Florida

DIETZ & DIETZ LAND SURVEYORS, INC.
1224 N. University Dr., Plantation, Florida 33322
(305) 475-7147

MINTO
FOR:
DATE:
ORDER NO.:
FIELD BOOK:
DATE REVISION ORDER NO.

RECORD DRAWING

DATE	REVISIONS
6-29-95	REVISE PER PEMBROKE PINES
6-29-95	MOVE W.M. TO SOUTH SIDE ROAD
5-24-95	ADD F.P.L. CROSSINGS

DATE	REVISIONS
2/2/96	ADD SBT CROSSING
9/10/96	Revise Per City comments
9/11/96	Add Sidewalk to West R/w
12/9/96	Revise Structure #33 RIM Elev.

DESIGNED: G.S.B. DATE: 11-94
DRAWN: K.P.R. DATE: 11-94
CHECKED: DATE:

TOWNGATE
MINTO COMMUNITIES (PEMBROKE), INC. - GENERAL PARTNER

N.W. 15th. STREET
STA. 258+00.00 TO STA. 264+00.00

WINNINGHAM & FRADLEY, INC.
ENGINEERS • PLANNERS • SURVEYORS

APPROVED:
DATE:
PROJECT NUMBER 94552
SHEET RD7 OF 8

DEC 16 1999

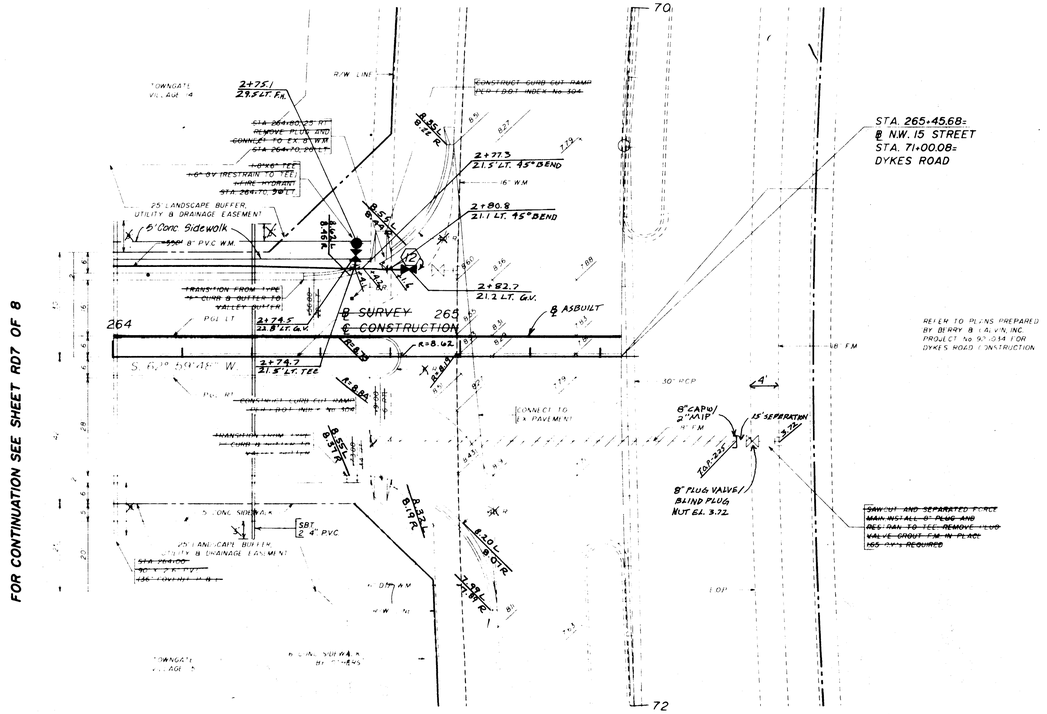

FOR CONTINUATION SEE SHEET RD7 OF 8

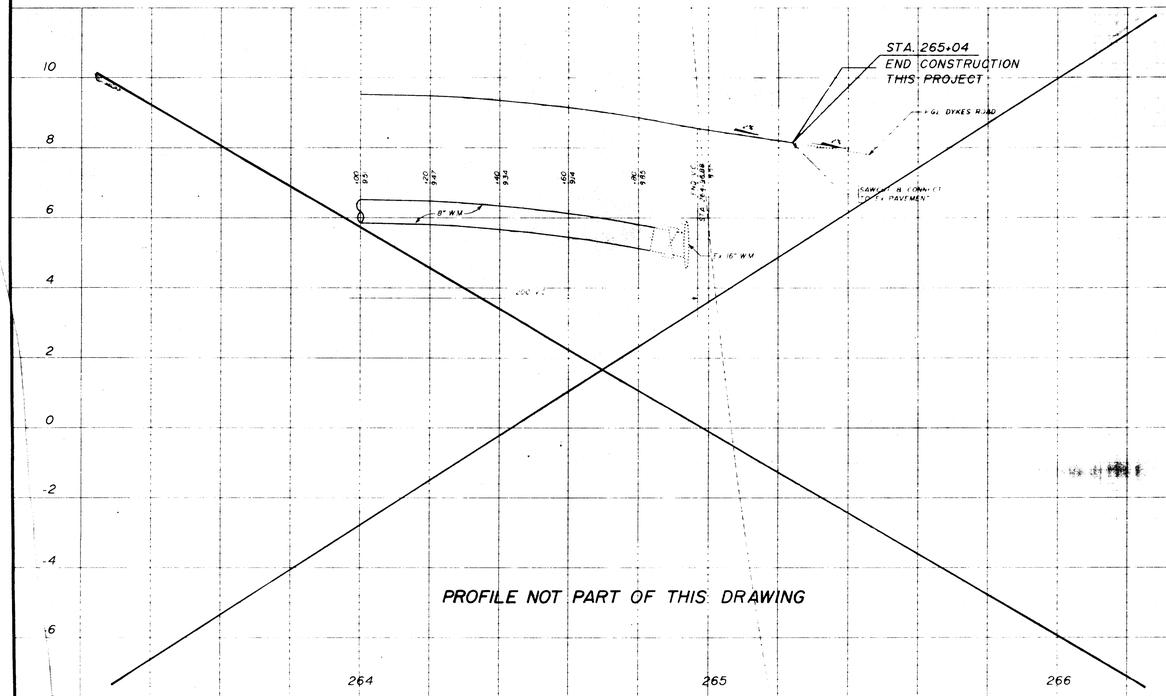

SKETCH OF AS-BUILT SURVEY

CERTIFICATE: I hereby certify that the above sketch correctly represents a survey made under my direction and that said survey meets the minimum technical standards for land surveying in the State of Florida (Chapter 61G17, Florida Administrative Code).

Roger A. Dietz
P.L.S. No. 4611
State of Florida

Not valid without embossed seal

Note: This instrument is not intended to reflect all easements, rights-of-way or matters affecting the property. Subject to or matters obtainable through qualified title verification.

DIETZ & DIETZ LAND SURVEYORS, INC.
1224 N. University Dr., Plantation, Florida 33322
(305) 475-7147

FOR: MINTO
DATE:
ORDER NO.:
FIELD BOOK:

DATE	REVISION	ORDER NO.

RECORD DRAWING

DESIGNED GSR DATE '94
DRAWN KPG
CHECKED
APPROVED

TOWNGATE
MINTO COMMUNITIES (PEMBROKE) INC. GENERAL PARTNER

N.W. 15th. STREET
STA. 264+00.00 TO STA. 265+45.68

WINNINGHAM & FRADLEY, INC.
ENGINEERS - PLANNERS - SURVEYORS

JOB NO. 94552 RD8 OF 8

DEC 16 1999

N.W. 15th. STREET

CITY OF PEMBROKE PINES, BROWARD COUNTY, FLORIDA

MINTO COMMUNITIES (PEMBROKE) INC. - GENERAL PARTNER

LEGEND

(2)	SANITARY STRUCTURE DESIGNATION
280 L.F. - 8" P.V.C. @ 0.42%	LENGTH, SIZE, TYPE, AND SLOPE OF PIPE
B.R.	FIRE HYDRANT WITH GATE VALVE & B.R.
(2)	BACTERIOLOGICAL SAMPLING POINT
R.E.	RIM ELEVATION
I.E.	INVERT ELEVATION
(2)	INLET DESIGNATION
250' - 24" R.C.P.	LENGTH, SIZE, AND TYPE OF PIPE
	FLOW OR WARP LINE
	RIDGE LINE
0.40%	PAVEMENT SLOPE AND DIRECTION
	DIRECTION OF OVERLAND FLOW
P.R.B.	POLLUTION RETARDANT BAFFLE
	CONCRETE SIDEWALK
	EXISTING OR FUTURE UTILITIES
4.9	PROPOSED GRADE
4.9	EXISTING GRADE
	PROPOSED PAVEMENT
	EXISTING OR FUTURE PAVEMENT
F.H.	FIRE HYDRANT
G.V.	GATE VALVE
W.M.	WATER MAIN
F.M.	FORCE MAIN
B.R.	BLUE REFLECTOR
	PAVEMENT RESTORATION
	PAVEMENT AND/OR ROCK REMOVAL
	SIDEWALK OR GUTTER REMOVAL

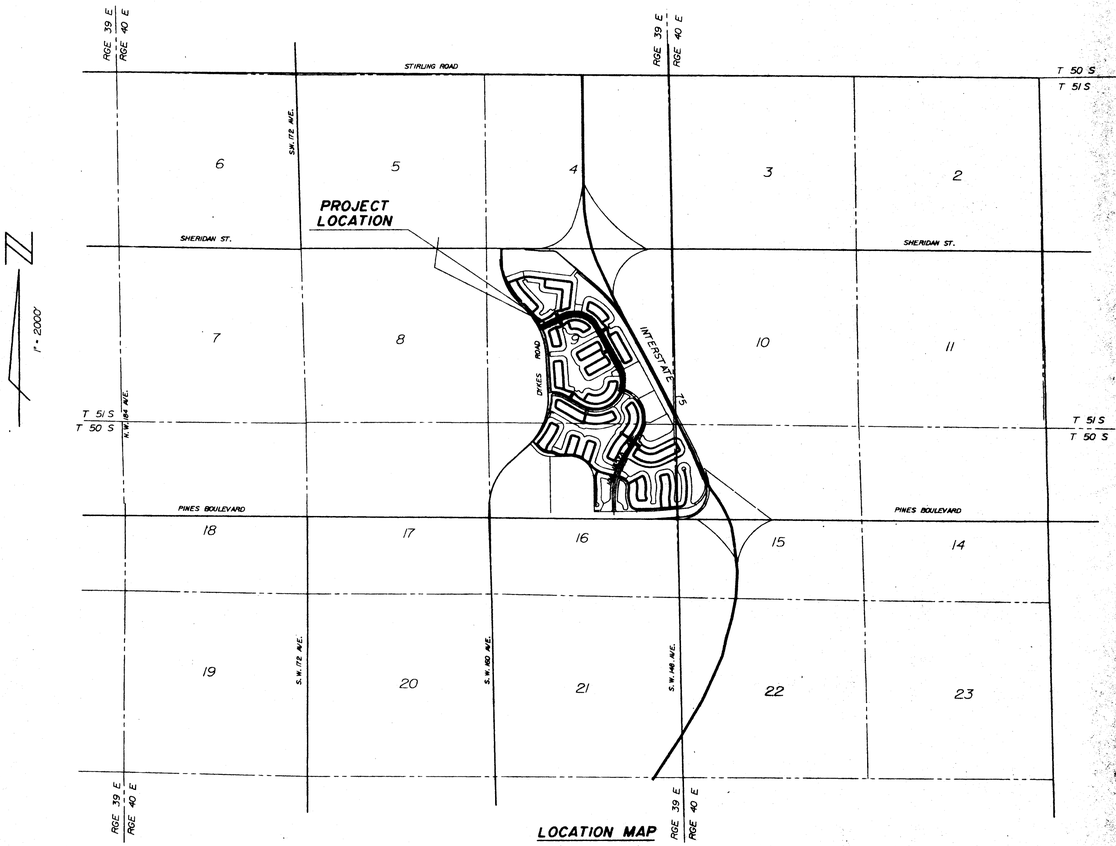

LOCATION MAP

INDEX TO SHEETS

DESCRIPTION	SHEET NUMBER
GENERAL NOTES AND SPECIFICATIONS	GN1 OF 1
KEY MAP - PLAN	R1 OF 15
ROADWAY SECTIONS - SECTIONS	R2 OF 15
ROADWAY IMPROVEMENTS - PLAN & PROFILE	R3 OF 15
ROADWAY IMPROVEMENTS - PLAN & PROFILE	R4 OF 15
ROADWAY IMPROVEMENTS - PLAN & PROFILE	R5 OF 15
ROADWAY IMPROVEMENTS - PLAN & PROFILE	R6 OF 15
ROADWAY IMPROVEMENTS - PLAN & PROFILE	R7 OF 15
ROADWAY IMPROVEMENTS - PLAN & PROFILE	R8 OF 15
ROADWAY IMPROVEMENTS - PLAN & PROFILE	R9 OF 15
ROADWAY IMPROVEMENTS - PLAN & PROFILE	R10 OF 15
SEWAGE COLLECTION SYSTEM - PROFILES	R11 OF 15
ROADWAY IMPROVEMENTS - DETAILS	R12 OF 15
LIFT STATION - PLAN - SECTIONS	R13 OF 15
WATER PRESSURE MAIN - DETAILS	R14 OF 15
SEWAGE COLLECTION SYSTEM - DETAILS	R15 OF 15
TRAFFIC MARKINGS - PLAN & DETAILS	TM1 OF 3
TRAFFIC MARKINGS - PLAN & DETAILS	TM2 OF 3
TRAFFIC MARKINGS - DETAILS	TM3 OF 3

LEGAL DESCRIPTION

ALL OF THE RIGHT-OF-WAY OF N.W. 15 STREET FROM N.W. 155TH AVENUE NORTHEAST TO DYKES ROAD AS SHOWN ON THE PLAT OF "TOWNGATE" AS RECORDED IN PLAT BOOK 156 PAGE 11 OF THE PUBLIC RECORDS OF BROWARD COUNTY, FLORIDA
Sec. 9, Twp. 51, Rge. 40

RECEIVED SEP 1 3 1995

PAVING AND DRAINAGE SYSTEM
WATER DISTRIBUTION SYSTEM
SEWAGE COLLECTION SYSTEM
TRAFFIC MARKINGS

BROWARD DRAINAGE SOUTH DISTRICT APPROVED
Revised Sheet 6
9/18/95
ok

RECEIVED SEP 1 3 1995

NO.	REVISIONS	DATE
1.	ADD SEC., TWP., RNG. PER S.B.D.C.	6-26-95

WINNINGHAM & FRADLEY, INC.
ENGINEERS • PLANNERS • SURVEYORS

APPROVED:
PROJECT NUMBER 94362
DATE MAY 94

SEP 13 1995

GENERAL NOTES FOR WATER DISTRIBUTION AND SEWAGE COLLECTION SYSTEMS

1. ALL APPLICABLE PERMITS MUST BE OBTAINED PRIOR TO COMMENCEMENT OF CONSTRUCTION.
2. ALL APPLICABLE FEES AND CHARGES MUST BE PAID PRIOR TO COMMENCEMENT OF CONSTRUCTION.
3. THE LOCATIONS OF EXISTING UTILITIES AS SHOWN ON THE APPROVED PLANS ARE TO BE VERIFIED IN THE FIELD BY THE CONTRACTOR.APPROVAL OF DEVELOPMENT PLANS BY THE CITY IN NO WAY IMPLIES VERIFICATION OF THE ACCURACY OF THOSE PLANS OR FEATURES DEPICTED THEREON.ANY DISCREPANCY IN, OR VARIATION FROM,THE APPROVED PLANS IS TO BE BROUGHT TO THE ATTENTION OF THE CITY'S ENGINEER BY THE OWNERS ENGINEER.
4. THE CONTRACTOR SHALL BE RESPONSIBLE AT ALL TIMES THROUGHOUT THE DURATION OF CONSTRUCTION FOR THE PROTECTION OF EXISTING AND NEWLY INSTALLED UTILITIES.
5. THE CONTRACTOR SHALL BE RESPONSIBLE FOR TAKING SUCH MEASURES AS NECESSARY TO PROTECT THE HEALTH,SAFETY AND WELFARE OF THOSE PERSONS HAVING ACCESS TO THE WORK SITE.
6. THE CONTRACTOR SHALL INFORM THE CITY OF PEMBROKE PINES ENGINEERING & UTILITY DEPARTMENT AT LEAST 48 HOURS IN ADVANCE OF COMMENCING CONSTRUCTION.
7. THE CONTRACTOR SHALL BE RESPONSIBLE FOR OBTAINING LOCATIONS OF ALL UTILITIES,AND NOTIFICATION OF SUNSHINE STATE 1(PH.1-800-432-4770,48 HOURS IN ADVANCE OF CONSTRUCTION)
8. THE CONTRACTOR SHALL INFORM THE CITY OF PEMBROKE PINES ENGINEERING & UTILITY DEPERTMENT AND WINNINGHAM & FRADLEY,INC.A MINIMUM OF 48 HOURS IN ADVANCE OF COMMENCEMENT WHEN CONNECTING TO A CITY FACILITY.
9. A PRE-CONSTRUCTION MEETING IS TO BE HELD AT CITY HALL AND ATTENDED BY THE CONTRACTOR,OWNER'S ENGINEER,AND OTHER INTERESTED PARTIES PRIOR TO ISSUANCE OF ANY CONSTRUCTION PERMITS.
10. THE CONTRACTOR SHALL BE RESPONSIBLE FOR THE SCHEDULING OF TESTS AS MAY BE DEEMED NECESSARY BY THE CITY OF PEMBROKE PINES UTILITY DEPARTMENT AND THE OWNER'S ENGINEER OR AS CALLED FOR IN THE PLANS AND SPECIFICATIONS.
11. CONSTRUCTION SHALL BE CARRIED OUT IN STRICT COMPLIANCE WITH THOSE STANDARDS ACCEPTED BY BROWARD COUNTY OFFICE OF ENVIRONMENTAL SERVICES AND ADOPTED BY THE CITY OF PEMBROKE PINES.
12. THE CONTRACTOR SHALL MAINTAIN A CURRENT APPROVED SET OF CONSTRUCTION PLANS ON-SITE.THE PLANS ARE TO BE MADE AVAILABLE TO THE CITY ENGINEER OR HIS DESIGNEE UPON REQUEST.
13. WHERE SANITARY SEWER MAINS CROSS UNDER WATER MAINS WITH LESS THAN 18 INCH VERTICAL CLEARANCE, AND WHERE THE SANITARY SEWER CROSSES ABOVE A WATER MAIN,BOTH PIPES SHALL BE DUCTILE IRON PIPE FOR A DISTANCE OF 20 FEET CENTERED ON THE POINT OF INTERSECTION.IN NO CASE SHALL VERTICAL CLEARANCE BETWEEN ANY UNDERGROUND PIPING BE LESS THAN 12 INCHES.A HORIZONTAL SEPARATION OF 10 FEET SHALL BE MAINTAINED BETWEEN SANITARY SEWER AND WATER MAIN.
14. THE OWNER'S ENGINEER SHALL MAKE SUFFICIENT OBSERVATIONS OF THE WORK TO ENABLE HIM TO CERTIFY TO THE INSTALLATION AS BEING IN SUBSTANTIAL CONFORMANCE WITH APPLICABLE STANDARDS AND SPECIFICATIONS.
15. THE CITY OF PEMBROKE PINES UTILITY DEPARTMENT AND THE ENGINEER OF RECORD WILL CARRY OUT INSPECTIONS OF THE WORK,AND WILL WITNESS PRESSURE,BACTERIOLOGICAL,AND INFILTRATION/ EXFILTRATION TESTS.TELEVISION INSPECTION OF ALL GRAVITY SANITARY SEWER SYSTEMS ARE REQUIRED.
16. THE CONTRACTOR SHALL SUPPLY AND INSTALL APPROVED REFLECTIVE MARKERS PLACED IN THE CENTER OF THE DRIVING LANE ADJACENT TO;FIRE HYDRANTS (BLUE REFLECTOR), AND VALVES OR M.H.S. OUTSIDE PAVEMENT AREAS.ORANGE R.P.M.'s FOR MANHOLES,WHITE R.P.M.'s FOR GATE VALVES,AND GREEN R.P.M.'s FOR FORCE MAIN VALVES.
17. THE FOLLOWING DOCUMENTS ARE TO BE ON FILE AT THE CITY OF PEMBROKE PINES PRIOR TO THE CONNECTION OF THE FIRST WATER METER:

    A. LETTERS OF ACCEPTANCE FROM:
    BROWARD COUNTY PUBLIC HEALTH UNIT
    BROWARD COUNTY DEPARTMENT OF NATURAL RESOURCE PROTECTION.

    B. CERTIFICATION OF ENGINEER OF RECORD.

    C. THREE SIGNED AND SEALED COPIES OF AS-BUILTS CERTIFIED BY A PROFESSIONAL ENGINEER OR LAND SURVEYOR REGISTERED IN THE STATE OF FLORIDA.

18. NO DEVIATION FROM APPROVED PLANS SHALL BE PERMITTED WITHOUT THE WRITTEN CONSENT OF THE OWNER'S ENGINEER.
19. THE MINIMUM ALLOWABLE HORIZONTAL CLEARANCE BETWEEN UTILITIES AND OBSTRUCTIONS TO BE 3'-0" INCLUDING CATCH BASINS. THE MINIMUM ALLOWABLE HORIZONTAL CLEARANCE BETWEEN UTILITIES AND TREES IS TO BE 5'-0"
20. THE MINIMUM FOOT VALVE SIZE ON FIRE HYDRANTS SHALL BE 5 1/4".

GENERAL NOTES FOR SEWAGE COLLECTION SYSTEM & DRAINAGE SYSTEM

1. PRECAST STRUCTURES SHALL CONFORM TO ASTM C-478 AND 64T. PRECAST STRUCTURES MUST BE CERTIFIED BY AN INDEPENDANT ENGINEERING TESTING LABORATORY. SIGNED AND DATED,CERTIFYING THAT THEY MEET THE REQUIREMENTS OF ASTM C-478 FOR CONCRETE STRENGTH,STEEL REINFORCEMENT AREA AND PLACEMENT,AND APPEARANCE. MANHOLES AND CATCH BASINS MUST BE INSPECTED BY THE CITY PRIOR TO UNLOADING.
2. CONCRETE FOR PRECAST MANHOLES AND CATCH BASINS OR CAST IN PLACE MANHOLES AND CATCH BASINS SHALL ATTAIN A MINIMUM COMPRESSIVE STRENGTH OF 4,000 PSI AT 28 DAYS.
3. MINIMUM WALL AND BASE THICKNESS FOR PRECAST MANHOLES SHALL BE 8 INCHES,EXCEPT FOR P BOTTOMS WHICH SHALL HAVE 6" WALLS.REINFORCING STEEL FOR MANHOLES AND CATCH BASINS SHALL CONFORM TO THE REQUIREMENTS OF ASTM A-615,A-305,A-185,AND A-497 LATEST REVISION.SPLICES SHALL HAVE A MINIMUM LAP OF 24 BAR DIAMETERS. MINIMUM COVER OVER REINFORCING STEEL SHALL BE 3 INCHES.ALL DRAINAGE STRUCTURES SHALL MEET FDOT SPECIFICATION.
4. ALL OPENINGS IN PRECAST MANHOLES AND CATCH BASINS SHALL BE CAST AT THE TIME OF PRODUCTION.
5. PRECAST MANHOLE AND CATCH BASIN SHOP DRAWINGS SHALL BE SUBMITTED TO THE CITY OF PEMBROKE PINES UTILITY DEPARTMENT AND THE OWNERS ENGINEER FOR APPROVAL.
6. ALL MANHOLES AND CATCH BASINS SHALL BE SET PLUMB TO LINE AND GRADE,AND SHALL REST ON A FIRM, CAREFULLY GRADED SUBGRADE,WHICH SHALL PROVIDE UNIFORM BEARING UNDER BASE.
7. MANHOLE SECTIONS SHALL BE JOINED WITH A MASTIC COMPOUND PRODUCING A WATER TIGHT BOND. THE REMAINING SPACE SHALL BE FILLED WITH CEMENT MORTAR AND FINISHED SO AS TO PRODUCE A SMOOTH CONTINUOUS SURFACE INSIDE AND OUTSIDE THE WALL SECTIONS.
8. ALL CONCRETE AND MORTAR USED IN MANHOLE AND CATCH BASIN CONSTRUCTION SHALL BE TYPE II CEMENT.
9. ALL SPACES AROUND PIPES ENTERING OR LEAVING MANHOLES SHALL BE COMPLETELY FILLED WITH EMBECO MORTAR (NON-METALLIC) OR BONSAL (NON-SHRINKING).
10. TWO COATS OF KOPPER'S 300 M SHALL BE APPLIED TO THE INSIDE OF THE MANNHOLES AND WETWELLS. FIRST COAT RED,SECOND COAT BLACK. ON THE OUTSIDE OF THE MANHOLE,ONLY ONE COAT IS REQUIRED.
11. SANITARY MANHOLES AND LIDS SHALL BE CAPABLE OF WITHSTANDING AASHTO H-20 LOADING. USF 420A. LIDS SHALL SAY "CITY OF PEMBROKE PINES SANITARY SEWER".
12. ALL GRAVITY SEWER PIPE SHALL BE PVC OR DUCTILE IRON. PVC PIPE SHALL CONFORM TO ASTM D 3034,SDR 35,LATEST REVISION,WITH MAXIMUM 13 FOOT LENGTHS AND PUSH-ON RUBBER GASKET JOINTS. DUCTILE IRON GRAVITY PIPE SHALL CONFORM TO THE SPECIFICATION FOR FORCE MAIN. ALL FORCE MAINS SHALL BE LINED WITH A VIRGIN POLYETHYLENE LINER COMPLYING WITH A.S.T.M. D-1248 COMPOUNDED WITH SUFFICIENT ADDITIVES TO RESIST ULTRAVIOLET RAYS DURING ABOVE GROUND STORAGE OF THE PIPE. THE POLYETHYLENE SHALL BE FUSED TO THE INTERIOR OF THE PIPE BY HEAT, FORMING A TIGHTLY BONDED LINING APPROXIMATELY 40 MILS THICK EXTENDING FROM SPIGOT END TO THE BARREL SOCKET
13. CONNECTING TO THE EXISTING SYSTEM: ALL CONNECTIONS TO EXISTING MAINS SHALL BE MADE UNDER THE DIRECTION OF THE CITY UTILITIES DEPARTMENT.VALVES THAT SEPARATE THE MAINS BEING INSTALLED FROM THE EXISTING MAINS SHALL BE OPERATED BY OR UNDER THE DIRECTION OF THE CITY UTILITIES DEPARTMENT REPRESENTATIVE ONLY.
14. THE CONTRACTOR SHALL TEST THE COMPLETED SEWER LINE TO DETERMINE THE ALIGNMENT AND TIGHTNESS OF THE JOINTS. GRAVITY SEWER MAINS SHALL BE LAMPED AND MUST SHOW A FULL CIRCLE OF LIGHT. INFILTRATION AND EXFILTRATION TESTING SHALL BE CONDUCTED. LEAKAGE SHALL NOT EXCEED 100 GALLONS PER INCH DIAMETER PER MILE PER DAY. NO VISIBLE INFILTRATION SHALL BE ALLOWED.
15. A RED STAKE SHALL BE INSTALLED AT EVERY SEWER SERVICE LOCATION.
16. SANITATY SEWER SHALL BE TELEVISED AT OWNERS EXPENSE.- OWNER / CONTRACTOR SHALL BE RESPONSIBLE FOR CORRECTING ANY DEFICIENCIES PROIR TO THE CITY'S CERTIFICATION OF COMPLETION TO ANY AGENCY.

PRESSURE MAIN SYSTEM NOTES

1. ALL PRESSURE MAIN SHALL BE PVC CONFORMING TO AWWA SPECIFICATION C-900-89-DR18.
2. FITTINGS SHALL BE DUCTILE IRON CLASS 350 MEETING AWWA/ANSI C153/A21.53-88 SPECIFICATIONS. FITTINGS MUST BE CEMENT LINED AND SEAL COATED PER AWWA/ANSI C104/A21.4-90.
3. GATE VALVES 4" AND LARGER SHALL MEET AWWA C-509-87 SPECIFICATION.VALVES MUST BE MUELLER CO. OR APPROVED EQUAL. MECHANICAL JOINT, RESILIENT SEATED.
4. WATER SERVICE PIPING,FITTINGS,AND SERVICE TUBING SHALL BE POLYETHYLENE CONFORMING TO AWWA SPECIFICATION C-902-88. SDR 9, 250 psi RATING.
5. ALL SERVICE CONNECTIONS SHALL BE TERMINATED WITH A 90° METER VALVE WITH PADLOCK WINGS. NO GATE VALVES WILL BE PERMITTED (2" OR LESS).
6. PAVEMENT RESTORATION SHALL BE CARRIED OUT IN ACCORDANCE WITH THE REQUIREMENTS OF THE AUTHORITY HAVING JURISDICTION.
7. ALL TRENCHING,PIPE-LAYING,BACKFILL,PRESSURE TESTING AND DISINFECTING MUST COMPLY WITH THE CITY OF PEMBROKE PINES UTILITIES WATER AND WASTEWATER MINIMUM CONSTRUCTION REQUIREMENTS.
8. THE ENGINEER WILL TAKE ALL BACTERIOLOGICAL SAMPLES TO AN H.R.S. CERTIFIED LABORATORY AND SUBMIT RESULTS TO THE CITY OF PEMBROKE PINES UTILITIES.
9. ALL CONNECTIONS TO EXISTING MAINS SHALL BE MADE UNDER THE DIRECTION OF THE CITY OF PEMBROKE PINES UTILITIES DEPARTMENT.
10. ALL PIPE,ETC.SHALL BE TESTED UNDER A CONSTANT PRESSURE OF 150 PSI FOR A MINIMUM TEST OF 2 HOURS AND SHALL NOT EXCEED THE LEAKAGE REQUIREMENTS AS PER AWWA SPECIFICATIONS OF C600-93 LEAKAGE FORMULA:

$$Q = \frac{S\,D\,\sqrt{P}}{133{,}200}$$

    Q = ALLOWABLE LEAKAGE IN GALLONS PER HOUR
    S = TOTAL LENGTH OF PIPE TESTED IN FEET
    D = DIAMETER OF THE PIPE TESTED IN INCHES
    P = AVERAGE TEST PRESSURE IN POUNDS PER SQUARE INCH

11. THE MINIMUM DEPTH OF COVER OVER P.V.C. WATER MAINS SHALL BE 36 INCHES & OVER D.I.P. SHALL BE 30 INCHES.
12. DISINFECTION OF MAINS SHALL COMPLY WITH AWWA C-651-92 SPECIFICATIONS.STANDARD BACTERIOLOGICAL SAMPLING POINTS SHALL BE DESIGNATED ON THE ENGINEERING PLANS.(FORCE MAIN SHALL NOT BE DISINFECTED)
13. MINIMUM VALVE SPACING SHALL BE AS PER SECTION 82 OF THE TEN STATES STANDARDS.
14. WHEN PVC IS USED FOR PRESSURE MAIN, A 3" STRIP OF METALLIC TAPE SHALL BE INSTALLED THE LENGTH OF THE PIPE 18" ABOVE THE PIPE WITH THE WORDS "WATERIOR FORCE) MAIN BURIED BELOW" FACING UPWARD.
15. ALL D.I.P. PRESSURE MAIN SHALL BE CLASS 350, CONFORMING TO A.W.W.A./A.N.S.I. SPECIFICATION C151/A21.4-91 AND BE CEMENT MORTAR LINED AND SEAL COATED PER A.W.W.A./A.N.S.I. SPECIFICATION C104/A21.4-90.
16. PLUG VALVES SHALL BE DUCTILE IRON AS MANUFACTURED BY CLOW OR EQUAL

PAVING AND DRAINAGE SYSTEM NOTES

1. ALL CONSTRUCTION SHALL CONFORM TO THE STANDARDS AND SPECIFICATIONS OF THE CITY OF PEMBROKE PINES ENGINEERING DEPARTMENT,THE SOUTH BROWARD DRAINAGE DISTRICT,AND THE FLORIDA DEPARTMENT OF TRANSPORTATION.
2. PRIOR TO CONSTRUCTION,THE CONTRACTOR SHALL GIVE TIMELY NOTIFICATION TO ALL UTILITY COMPANIES WITH FACILITIES IN THE AREA.
3. THE LOCATIONS OF EXISTING FACILITIES WERE PLOTTED FROM AVAILABLE RECORDS.THE CONTRACTOR SHALL TAKE ALL NECESSARY PRECAUTIONS TO SAFEGUARD ALL EXISTING STRUCTURES,UTILITIES AND SURVEY MARKERS.
4. ALL DRAINAGE PIPE SHALL BE REINFORCED CONCRETE PIPE (RCP) MEETING THE REQUIREMENTS OF ASTM SPECIFICATION C76-85a.
5. MINIMUM COVER FOR ALL PIPE CULVERTS SHALL MEET THE REQUIREMENTS OF THE FLORIDA DEPARTMENT OF TRANSPORTATION ROADWAY AND TRAFFIC DESIGN STANDARDS (INDEX NO.205).
6. ALL UNDERGROUND FACILITIES SHALL BE INSTALLED PRIOR TO PLACING THE LIMEROCK BASE MATERIAL.
7. THE CONTRACTOR AND/OR HIS SUPERINTENDENT SHALL HAVE AT LEAST ONE COPY OF EACH OF THE FOLLOWING PUBLICATIONS ON THE JOB SITE DURING CONSTRUCTION OF THIS PROJECT:
    A) CITY OF PEMBROKE PINES ENGINEERING DEPARTMENT-STANDARD DETAILS SPECIFICATIONS & PROCEDURAL MANUAL, JANUARY 1990.
    B) FLORIDA DEPARTMENT OF TRANSPORTATION-STANDARD SPECIFICATION FOR ROAD AND BRIDGE CONSTRUCTION,LATEST EDITION.
    C) FLORIDA DEPARTMENT OF TRANSPORTATION ROADWAY AND TRAFFIC DESIGN STANDARDS, JANUARY 1992.
    D) U.S. DEPARTMENT OF TRANSPORTATION-FEDERAL HIGHWAY ADMINISTRATION MANUAL ON UNIFORM TRAFFIC CONTROL DEVICES, MARCH 1988.
8. THE FOLLOWING INSPECTIONS ARE REQUIRED BY THE CITY OF PEMBROKE PINES ENGINEERING DEPT. PLEASE CALL 435-6512 48 HRS PRIOR TO THE TIME THE INSPECTION IS NEEDED.

    A. CLEARING AND FILLING
    B. STORM DRAINS/UTILITIES
    C. SUBGRADE
    D. ROCK BASE
    E. PRIME COAT
    F. ASPHALT
    G. FINAL
    H. PAVEMENT MARKINGS

9. DENSITY TESTS FOR SUBGRADE MUST BE SUBMITTED TO AND APROVED BY THE CITY OF PEMBROKE PINES.
10. DENSITY TESTS AND AS-BUILTS FOR LIMEROCK BASE MUST BE SUBMITTED AND APPROVED BY THE CITY OF PEMBROKE PINES PRIOR TO THE PLACEMENT OF ANY ASPHALT.

SOUTH BROWARD DRAINAGE DISTRICT GENERAL NOTES

1. THE FOLLOWING GENERAL NOTES ARE REQUIRED BY SOUTH BROWARD DRAINAGE DISTRICT. THEY ARE NOT MEANT TO BE ALL INCLUSIVE AND IT IS THE ENGINEER'S RESPONSIBILITY TO ADD ANY NOTES WHICH WILL INFORM THE OWNER AND THE CONTRACTOR OF ANY ADDITIONAL REQUIREMENTS OF THE SOUTH BROWARD DRAINAGE DISTRICT.
2. LIMEROCK BASE COURSE SHALL CONFORM TO THE REQUIREMENTS OF SECTION 911 OF FLORIDA DEPARTMENT OF TRANSPORTATION STANDARD SPECIFICATIONS EXCEPT THE MINIMUM PERCENTAGE OF CARBONATE OF CALCIUM AND MAGNESIUM SHALL BE SIXTY PERCENT (60%).
3. THE CONTRACTOR SHALL CALL THE SOUTH BROWARD DRAINAGE DISTRICT 24 HOURS PRIOR TO BACK-FILLING OF DRAINAGE TRENCHES,PLACEMENT OF ASPHALT,SHAPING OF CANAL OR LAKE BANKS FROM THE DEEP CUT LINE AND AS REQUIRED BY DISTRICT. CALL (305) 681-3337 OR (305) 680-3337/8. THE SOUTH BROWARD DRAINAGE DISTRICT'S WORKING HOURS ARE FROM 8:00 A.M. TO 4:30 P.M.
4. ANY REVISIONS TO THESE PLANS MUST BE APPROVED BY SOUTH BROWARD DRAINAGE DISTRICT PRIOR TO CONSTRUCTION.
5. BONDS AND INSPECTIONS

    UPON DISTRICT BOARD OF SUPERVISORS APPROVAL OF PLANS,BUT BEFORE CONSTRUCTION CAN COMMENCE,THE FOLLOWING ITEMS MUST BE COMPLIED WITH:

    A. BOND (CASH OR SURETY) OR LETTER OF CREDIT,IN THE DISTRICT'S FAVOR,MUST BE POSTED IN THE AMOUNT STATED IN SECTION 411 OF THE DISTRICT'S DESIGN CRITERIA MANUAL.
    B. ALL EASEMENTS,DEED RESTRICTIONS,INDEMNIFICATION AGREEMENTS,MAINTENANCE AGREEMENTS AND DEEDS AS REQUIRED BY THE DISTRICT SHALL BE PRESENTED TO THE DISTRICT MANAGER AND ATTORNEY FOR APPROVAL BEFORE RECORDATION. ALL COSTS OF RECORDING THE APPLICABLE INSTRUMENT WILL BE BORNE BY THE DEVELOPER.
    C. UPON COMPLIANCE WITH THE CONDITIONS REQUIRED BY THE DISTRICT FOR APPROVAL AND RECEIPT OF APPROVED PLANS FROM THE DISTRICT'S ENGINEER,THE DISTRICT'S MANAGER WILL MARK THE PLANS "APPROVED" AND SIGN SAME AND DISTRIBUTE THE APPROVED PLANS TO THE DEVELOPER AND THE DISTRICT FILES.
    D. BONDS SHALL BE PROVIDED BY THE PRINCIPALS OF DEVELOPMENTS ONLY. CONTRACTOR OR SUB-CONTRACTOR BONDS ARE NOT ACCEPTABLE.
    E. IF REQUIRED BY DISTRICT,A PRE-CONSTRUCTION MEETING SHALL BE SCHEDULED AT LEAST SEVEN (7) DAYS PRIOR TO CONSTRUCTION.
6. WHEN CONSTRUCTION IS IN PROGRESS,THE DISTRICT'S INSPECTOR WILL INSPECT THE INSTALLATION OF DRAINAGE WORKS,ACCORDING TO AN INSPECTION SCHEDULE ESTABLISHED BY THE DISTRICT. INSPECTION MUST BE MADE BY DISTRICT PERSONNEL OF ALL UNDERGROUND STORM DRAIN FACILITIES BEFORE BACKFILLING; CALL (305) 680-3337 OR (305) 680-3338 FOR AN INSPECTION APPOINTMENT A MINIMUM OF TWENTY-FOUR (24) HOURS IN ADVANCE. ALL COSTS OF PERIODIC INSPECTIONS OF CONSTRUCTION BY THE DISTRICT SHALL BE BORNE BY THE DEVELOPER.
7. CERTIFIED "AS-BUILT" PLANS FROM THE ENGINEER OF RECORD WHICH ARE ACCEPTED AND APPROVED BY THE DISTRICT'S ENGINEERS AND MANAGER WILL BE REQUIRED BEFORE RELEASE OF THE BOND OR LETTER OF CREDIT. AS-BUILTS SHALL BE PROVIDED AS AN OVERLAY ON THE APPROVED CONSTRUCTION DRAWINGS AT THE SAME SCALE FOR COMPARISON PURPOSES. AS-BUILT SUBMITTAL SHALL FOLLOW THE SAME FORMAT OF GENERAL REVIEW AS OUTLINED IN SECTION 32 OF SOUTH BROWARD DRAINAGE DISTRICT'S CRITERIA AND PERMIT MANUAL.
8. LAKE AND CANAL AS-BUILTS SHALL BE CROSS SECTIONED SHOWING THE DESIGNED SECTION AS DASHED,AS-BUILT SECTION AS SOLID AND HAVE THE TOP OF BANK REFERENCED TO THE LAKE/CANAL MAINTENANCE EASEMENT AND PROPERTY LINES. SPACING BETWEEN EACH CROSS-SECTION SHALL BE SUCH AS TO PROVIDE ENOUGH DATA TO DETERMINE IF THE LAKE/CANAL WAS CONSTRUCTED AS DESIGNED,BUT NO GREATER THAN ONE HUNDRED (100) FEET BETWEEN CROSS-SECTIONS, UNLESS APPROVED BY DISTRICT'S ENGINEER. PLAN VIEW OF ACTUAL LOCATION OF THE TOP OF BANK AND DEEP-CUT LINE SHALL BE PROVIDED WITH CROSS-SECTIONS.
9. UPON SUCCESSFUL COMPLETION OF THE CONSTRUCTION AND ACCEPTANCE OF "AS-BUILTS",THE BOND OR LETTER OF CREDIT MAY BE RELEASED FOLLOWING PAYMENT TO THE DISTRICT FOR ALL EXPENSES AND COSTS INCURRED BY THE DISTRICT WHICH ARE REQUIRED TO BE PAID BY THE DEVELOPER.
10. THE CONTRACTOR CONSTRUCTING OR EXCAVATING LAKES OR OTHER WATER BODIES SHALL EXERCISE EXTREME CAUTION TO ENSURE THAT THE BANK SLOPES AND DEEP-CUT LINES ARE CONSTRUCTED IN ACCORDANCE WITH APPROVED PLANS FOR THE DEVELOPMENT. THE CONTRACTOR OR OWNER SHALL PERIODICALLY OR AS REQUESTED BY THE DISTRICT OBTAIN A SURVEY FROM A FLORIDA REGISTERED SURVEYOR OF THE LOCATION OF THE DEEP CUT LINES PRIOR TO FORMING THE BANK SLOPES. THIS SURVEY SHALL BE TAKEN PRIOR TO THE OWNER/CONTRACTOR BEGINNING CONSTRUCTION OF THE BUILDING PAD ADJACENT TO THE WATER BODY. IN THE EVENT THE CONTRACTOR/OWNER OVERCUTS OR OVERDIGS THE WATER BODY,THE CONTRACTOR/OWNER SHALL SUBMIT TO THE DISTRICT ITS RECOMMENDED SOLUTION TO CORRECT THE OVER DIGGING. ANY SUGGESTED REMEDY OR CORRECTION MUST BE APPROVED BY THE DISTRICT BEFORE THE CONTRACTOR/OWNER COMMENCES CONSTRUCTION OF THE PROPOSED CORRECTION/REMEDY.

RECORD DRAWING DATA REQUIREMENTS:

1. ALL PRESSURE MAINS SHALL HAVE THE TOP OF PIPE'S ELEVATION SHOWN AT 100' O/C MINIMUM.
2. ALL FITTINGS AND VALVES SHALL BE LOCATED USING A PHYSICAL BASELINE AT THE TOP OF FITTING ELEVATION.
3. LOCATE ALL WATER SERVICES, SEWER SERVICES, VALVES, FIRE HYDRANTS & CLEANOUTS FROM A PHYSICAL BASELINE.
4. SHOW ALL BACTERIOLOGICAL SAMPLE POINTS AND NUMBER CONSECUTIVELY.
5. IDENTIFY ALL PIPE MATERIAL USED ON THE PROJECT SPECIFICALLY SHOWING WHERE PIPE WAS CHANGED IN MATERIAL TYPE.
6. RECORD DRAWINGS SHALL BE LOCATED AND CERIFIED BY A P.L.S. REGISTERED IN THE STATE OF FLORIDA.

NO.	REVISIONS	DATE
1.	REVISE PHONE No. S.B.D.D.	6-28-95

GENERAL NOTES

N.W. 15TH STREET

TOWNGATE LIMITED PARTNERSHIP
MINTO COMMUNITIES (PEMBROKE), INC.

WINNINGHAM & FRADLEY, INC.
ENGINEERS • PLANNERS • SURVEYORS

DESIGNED: WBF DATE: 12/94
DRAWN: WBF DATE: 12/94
CHECKED: DATE:
APPROVED:
PROJECT NUMBER 94552
SHEET 1 OF 1

SEP 13 1995

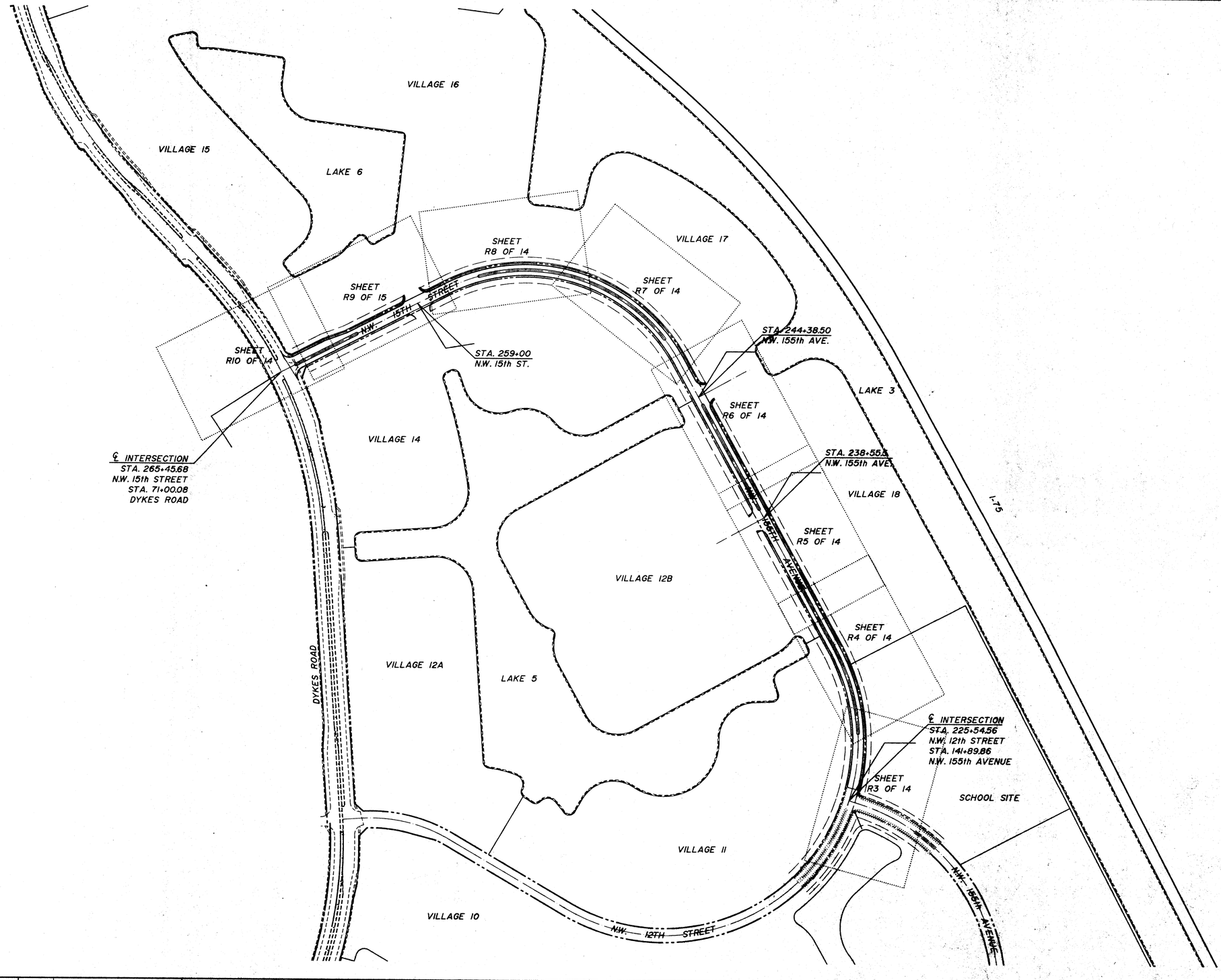

DATE	REVISIONS	DATE	REVISIONS

DESIGNED: G.S.B. DATE: 12/94
DRAWN: K.P.P. DATE: 12/94
CHECKED: DATE:

TOWN GATE
MINTO COMMUNITIES (PEMBROKE), INC. - GENERAL PARTNER

N.W. 155th AVE. AND N.W. 15th. STREET
KEY MAP

WINNINGHAM & FRADLEY, INC.
ENGINEERS • PLANNERS • SURVEYORS

APPROVED:
DATE:
PROJECT NUMBER 94552
SHEET R1 OF 15

SEP 13 1995

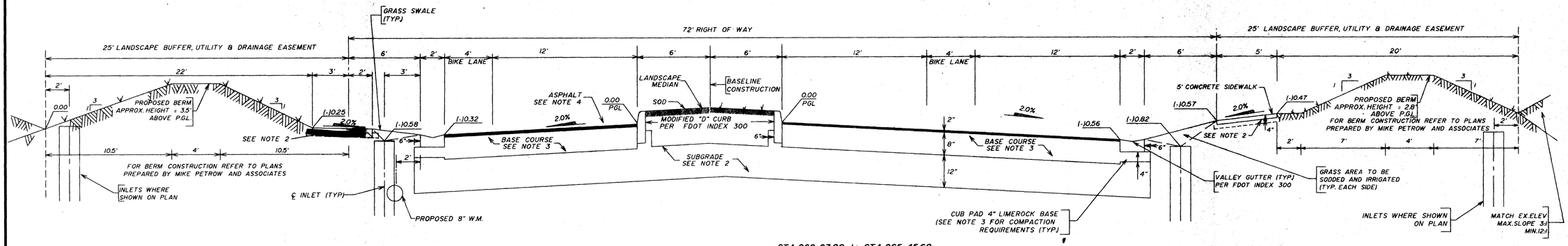

STA.262+23.88 to STA.265+45.68
NW 15th STREET
Design Speed 30 m.p.h.

Pavement Notes:

1) The entire width of the right-of-way shall be demucked of all A-5, A-7, and A-8 material and replaced with clean granular fill.
2) The subgrade material shall have a minimum LBR of 40, and shall be compacted to a minimum of 95% maximum dry density per AASHTO T-180.
3) The lime rock base shall be 8" thick and shall have a minimum LBR of 100 with 60% or more of calcium carbonates, and shall be compacted to at least 98% of the maximum dry density per AASHTO T-180 and primed at a rate of 0.1 gallons per square yard.
4) Asphaltic concrete shall be installed in 2 lifts. The first lift shall be 1 1/4" of Type S-1. Upon completion of the first lift the temporary markings and signage shall be installed in reflectorized paint. The 2nd lift shall be 3/4" of Type S-III, and shall be installed over a tack coat applied at 0.05 gallons per square yards. After the 30 day cure period the permanent traffic markings shall be installed in thermoplastic.

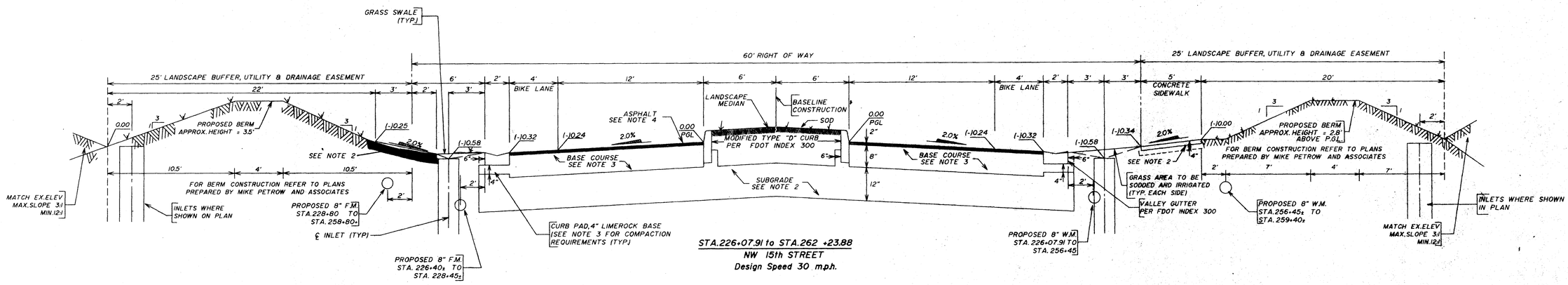

STA.226+07.91 to STA.262 +23.88
NW 15th STREET
Design Speed 30 m.p.h.

DATE	REVISIONS	DATE	REVISIONS
		8-2-95	REVISE PER B.C.E.D.
		6-27-95	ADD STA. ON F.M. & W.M. PER C.O.P.U.D.
9-11-95	ADD SIDEWALK TO WEST SIDE OF ROADWAY	6-26-95	ADD CURBPAD PER C.O.P.E.D.

DESIGNED: G.S.B. DATE: 12-94
DRAWN: D.O.I. DATE: 12-94
CHECKED: DATE:

TOWN GATE
MINTO COMMUNITIES (PEMBROKE), INC. - GENERAL PARTNER

N.W. 15th STREET PAVEMENT SECTIONS

WINNINGHAM & FRADLEY, INC.
ENGINEERS • PLANNERS • SURVEYORS

APPROVED:
DATE:
PROJECT NUMBER 94552
SHEET R2 OF 15

SEP 13 1995

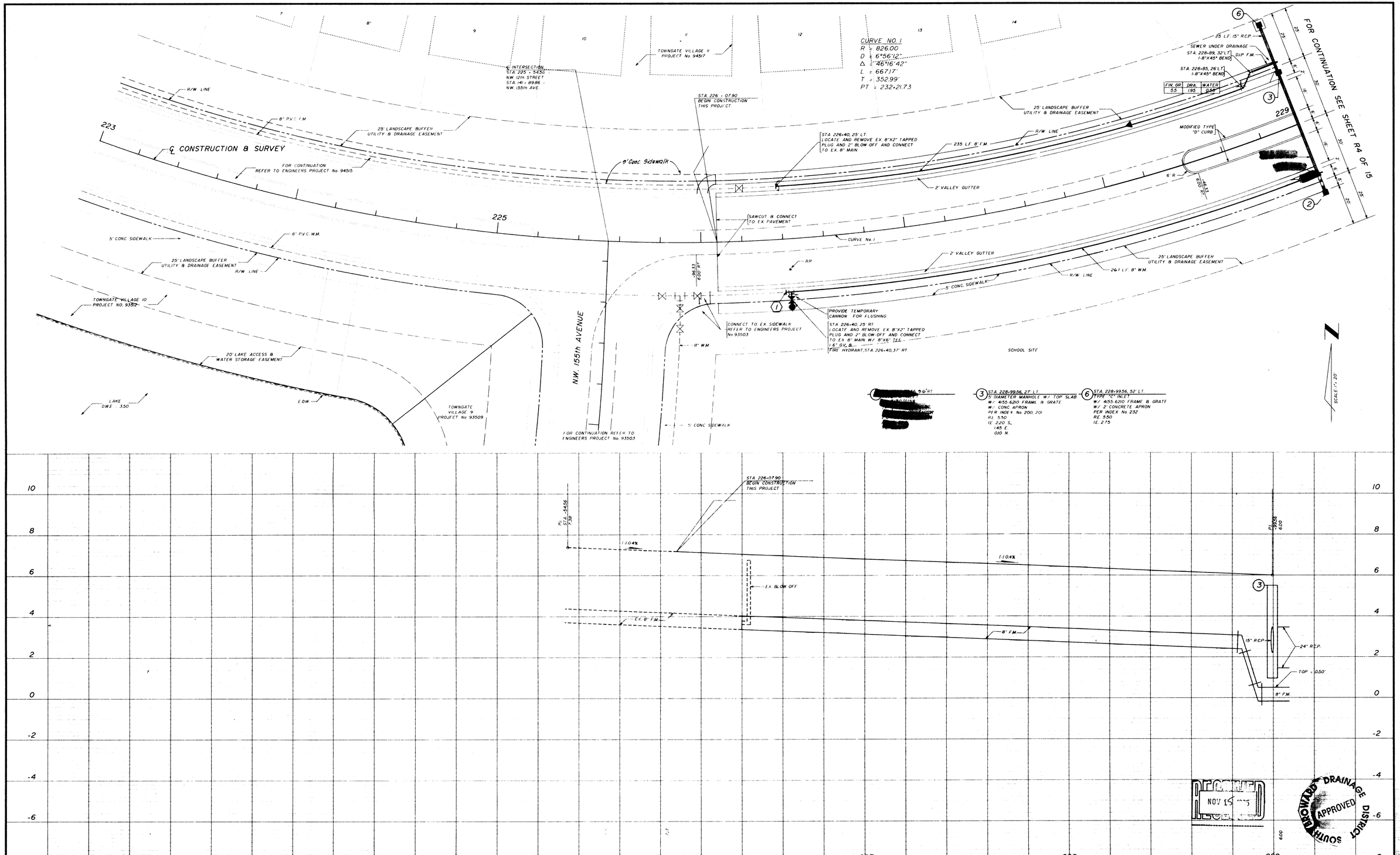

DATE	REVISIONS	DATE	REVISIONS
10/16/95	Remove MH No. 1 & Relocate Basin No. 2		
9/29/95	Revise Per City comments		
9/11/95	Add Sidewalk to West R/W	6-27-95	ADD STATIONS AND OFFSET TO F.H.

DESIGNED: G.S.B. DATE: 11-94
DRAWN: K.P.R. DATE: 11-94
CHECKED: DATE:

TOWNGATE
MINTO COMMUNITIES (PEMBROKE), INC. - GENERAL PARTNER

N.W. 15th. STREET
STA. 226+07.90 TO STA. 229+00.00

WINNINGHAM & FRADLEY, INC.
ENGINEERS - PLANNERS - SURVEYORS

APPROVED:
DATE:
PROJECT NUMBER 94552
SHEET 13 OF 15

RECEIVED
NOV 15 1995

BROWARD SOUTH DRAINAGE DISTRICT
APPROVED

NOV 15 1995

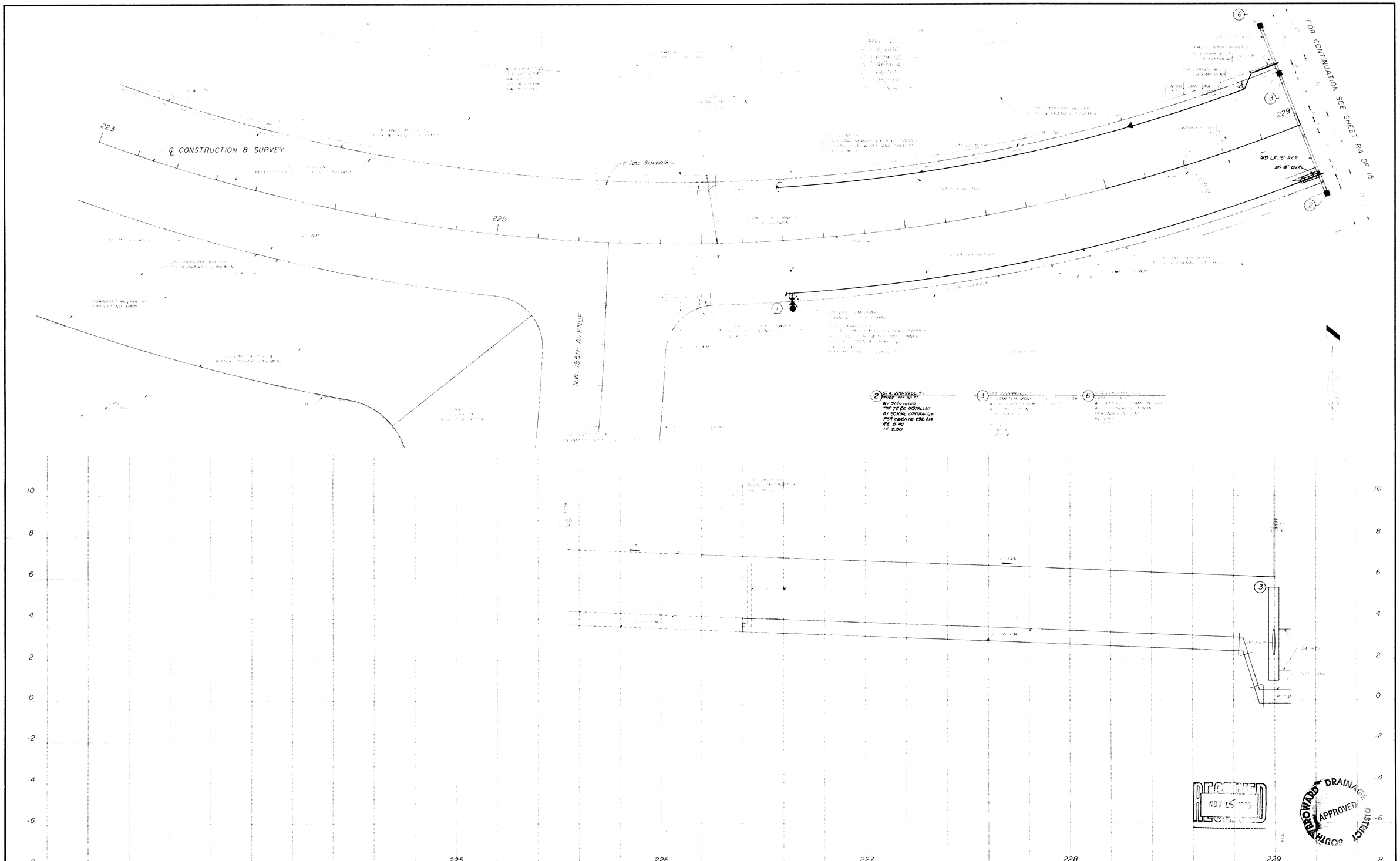

DATE	REVISIONS	DATE	REVISIONS
10/16/95	Remove MH No. 1 & Relocate Basin No. 2		
9/20/95	Revise Per City comments		
9/11/95	Add Sidewalk to West R/W	6-27-95	ADD STATIONS AND OFFSET TO F.H.

DESIGNED GSB DATE
DRAWN KPR DATE
CHECKED DATE

TOWNGATE
MINTO COMMUNITIES (PEMBROKE), INC. - GENERAL PARTNER

N.W. 15th. STREET
STA. 226+07.90 TO STA. 229+00.00

WINNINGHAM & FRADLEY, INC.
ENGINEERS • PLANNERS • SURVEYORS

APPROVED
DATE
PROJECT NUMBER 94552
SHEET R3 OF 15

NOV 15 1995

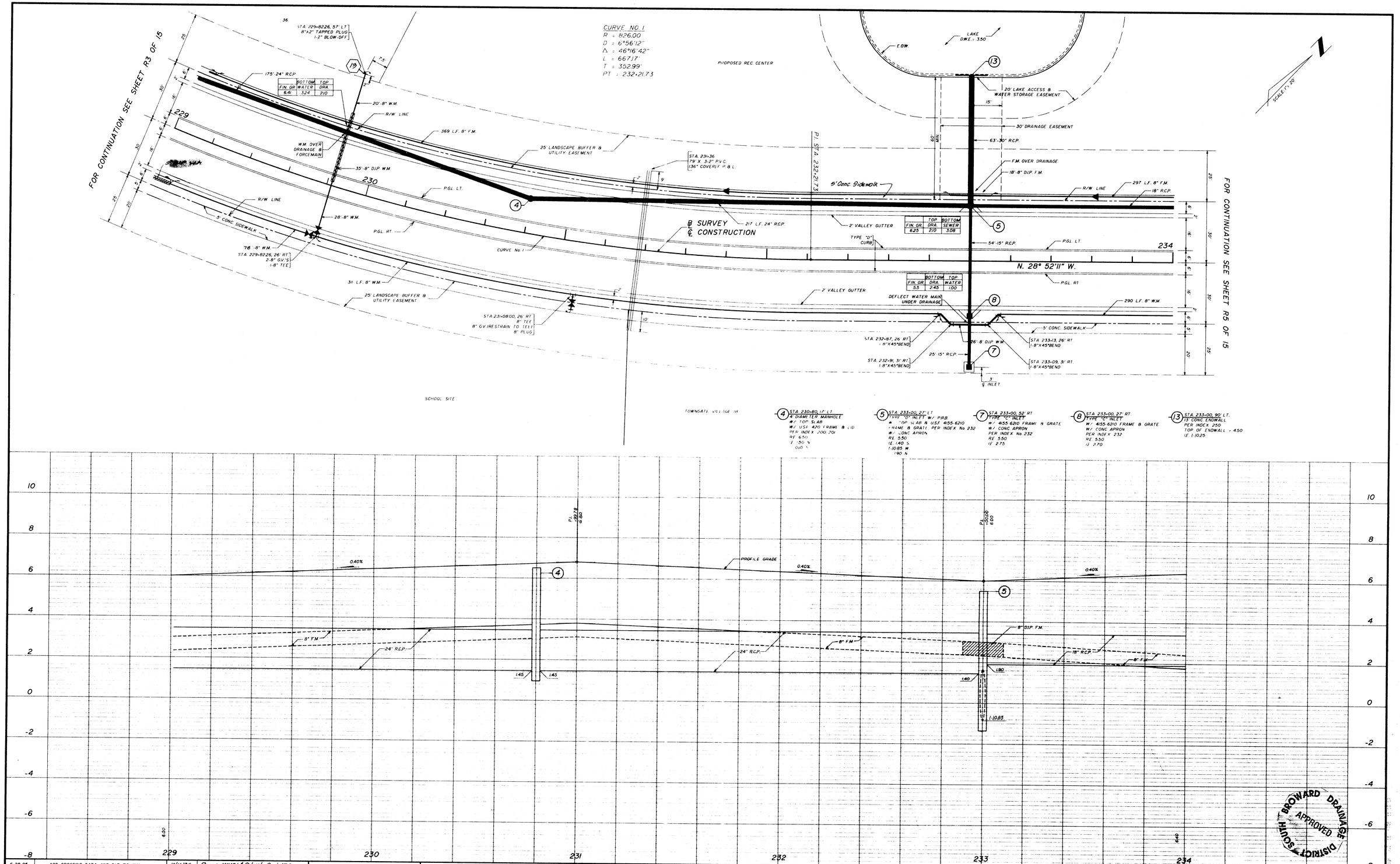

	BOTTOM	TOP
FIN. GR.	WATER	DRA.
6.41	3.24	2.10

	TOP	BOTTOM
FIN. GR.	DRA.	SEWER
6.25	2.10	3.08

	BOTTOM	TOP
FIN. GR.	DRA.	WATER
5.5	2.45	1.00

(4) STA. 230+80, 17' LT. 4' DIAMETER MANHOLE W/ TOP SLAB W/ USF 420 FRAME & LID PER INDEX 200, 201 RE 6.50 IE 1.50 N 0.10 S

(5) STA. 233+00, 27' LT. TYPE "D" INLET W/ P.R.B. W/ TOP SLAB & USF 4155-6210 FRAME & GRATE PER INDEX No. 232 W/ CONC. APRON RE 5.50 IE 1.40 S 1-10.85 W 1.90 N

(7) STA. 233+00, 52' RT. TYPE "C" INLET W/ 4155-6210 FRAME & GRATE W/ CONC. APRON PER INDEX No. 232 RE 5.50 IE 2.75

(8) STA. 233+00, 27' RT. TYPE "C" INLET W/ 4155-6210 FRAME & GRATE W/ CONC. APRON PER INDEX 232 RE 5.50 IE 2.70

(13) STA. 233+00, 90' LT. 13' CONC. ENDWALL PER INDEX 250 TOP OF ENDWALL = 4.50 IE 1-10.25

DATE	REVISIONS	DATE	REVISIONS
6-28-95	ADD CROSSING DATA AND D.I.P. TO W.M.	10/16/95	Remove MH No. 1 & Relocate Basin No. 2
6-27-95	ADD DRAINAGE EASEMENT PER P.P.E.D.	9/11/95	Add Sidewalk to West R/W
5-24-95	ADD F.P.L. CROSSINGS	8/28/95	REVISE HIGH PT. EL. TO 6.80

DESIGNED: G.S.B. DATE: 11-94
DRAWN: K.P.R. DATE: 11-94
CHECKED: DATE:

TOWNGATE
MINTO COMMUNITIES (PEMBROKE), INC. - GENERAL PARTNER

N.W. 15th. STREET
STA. 229+00.00 TO STA. 234+00.00

WINNINGHAM & FRADLEY, INC.
ENGINEERS • PLANNERS • SURVEYORS

APPROVED:
DATE:
PROJECT NUMBER 94552
SHEET R4 OF 15

SOUTH BROWARD DRAINAGE DISTRICT APPROVED

NOV 15 1995

TOWNGATE VILLAGE 12B

TOWNGATE VILLAGE 12B

SCALE 1"=40'

FOR CONTINUATION SEE SHEET R4 OF 15

FOR CONTINUATION SEE SHEET R6 OF 15

25' LANDSCAPE BUFFER, UTILITY & DRAINAGE EASEMENT

316'-18" R.C.P.

2' VALLEY GUTTER

R/W LINE

P.G.L. RT.

TYPE "D" CURB

234

235

P.G.L. LT.

R=6'

2' VALLEY GUTTER

5' CONC. SIDEWALK

R/W LINE

25' LANDSCAPE BUFFER, UTILITY & DRAINAGE EASEMENT

SEWER UNDER DRAINAGE

	BOTTOM	TOP
FIN. GR.	DRA.	WATER
6.25	2.08	1.08

℄ INLET

25'-15" R.C.P.

20'-8" D.I.P. F.M.

℄ INLET

6' Conc. Sidewalk

510 L.F. 8" F.M.

54'-15" R.C.P.

N. 28° 52' 11" W.

℄ SURVEY ℄ CONSTRUCTION

DRAINAGE OVER WATER

STA. 236+04, 26' RT. 8"X45° BEND

STA. 236+07, 31' RT. 8"X45° BEND

26'-8" D.I.P. W.M.

℄ INLET

25'-15" R.C.P.

STA. 236+29, 26' RT. 8"X45° BEND

STA. 236+26, 31' RT. 8"X45° BEND

190 L.F. 8" W.M.

	TOP	BOTTOM
FIN. GR.	WATER	DRA.
5.50	1.52	2.52

STA. 237+64 77' X 3'-2" P.V.C. (36" COVER) F. P. & L.

STA. 238+18.50, 52' LT. 1-8"X2" TAPPED PLUG 2" BLOW-OFF

DEFLECT F.M. UNDER WATER, MAINTAIN 18" CLEARANCE

45 L.F. 8" P.V.C. at 0.30%

STA. 238+94.53' LT.
1-8"X6" TEE
1-2" BLOW OFF
1-6" G.V.
1-FIRE HYDRANT, STA. 239+04.53' RT.

98' X 2'-6" P.V.C. (36" COVER) F. P. & L.

TRANSITION TO VALLEY GUTTER

STA. 239+44 77' X 3'-2" P.V.C. (36" COVER) F. P. & L.

R/W LINE

5' Conc. Sidewalk

Construct Curb Cut Ramp Per FDOT Index 11" 304

TRANSITION TO TYPE "F" CURB & GUTTER

78'-8" P.V.C. W.M.

P.G.L. LT.

261 L.F. 8" P.V.C. at 0.30%

240

R=35'

R=6'

78'-8" W.M.

SEWER UNDER WATER 55'-8" P.V.C. @ 0.30%

TRANSITION TO VALLEY GUTTER

P.G.L. RT.

239'-8" P.V.C. W.M.

75'-8" P.V.C. W.M.

5' CONC. SIDEWALK

R/W LINE

STA. 238+18.50, 26' RT. 1-8" CROSS 3-8" G.V.'S 4-8" PLUGS

STA. 238+94.26' RT. 1-8" TEE 1-8" G.V.

R=25'

R=35'

(9) STA. 236+16.42, 52' RT.
TYPE "D" INLET
W/ 4155-6210 FRAME & GRATE
W/ CONC. APRON
PER INDEX 232
RE. 5.50
IE. 2.75

(10) STA. 236+16.42, 27' RT.
TYPE "D" INLET
W/ 4155-6210 FRAME & GRATE
W/ CONC. APRON
PER INDEX 232
RE. 5.50
IE. 2.70

(11) STA. 236+16.42, 27' LT.
4' DIAMETER MANHOLE
W/ TOP SLAB
W/ 4155-6210 FRAME & GRATE
W/ CONC. APRON
PER INDEX 200, 201
RE. 5.50
IE. 2.15 E, W
1.90 S.

(12) STA. 236+16.42, 52' LT.
TYPE "D" INLET
W/ 4155-6210 FRAME & GRATE
W/ CONC. APRON
PER INDEX 232
RE. 5.50
IE. 2.75

(8) STA. 238+76.5, 40' RT.
5' DIA. MANHOLE
RE. 6.84
IE. 1-2.99 NW, SE
1-2.99 SW
(PLUGGED W/ BRICK & MORTAR PLUG)

(3) STA. 238+76.5, 14' LT.
5' DIA. MANHOLE
RE. 6.93
IE. 1-3.18 NW, SE
1-3.23 NE.

(4) STA. 238+76.50, 60' LT.
4' DIA. MANHOLE
RE. 6.84
IE. 1-2.99 NW (PLUGGED W/ BRICK & MORTAR PLUG)
1-3.04 SE.

TOWNGATE VILLAGE 18

	P.I. 1+00	P.I. 4+43	P.I. 15+50
ELEV.	6.74	1.62	7.77

0.40%

0.40%

0.40%

0.40%

18" R.C.P.

8" F.M.

15" R.C.P.

190

215

T.O.P. 1.20

8" DIP F.M.

B.O.P. 2.85

8" WATER MAIN

T.O.P. 1.35

8" F.M.

B.O.P. 2.85

8" WATER MAIN

T.O.P. 1.35

8" F.M.

10 8 6 4 2 0 -2 -4 -6 -8

234 235 236 237 238 239 240

6.40

BROWARD COUNTY DRAINAGE DISTRICT

APPROVED

DATE	REVISIONS
7-31-96	REVISE PER CITY P.P.U.D.
6-28-96	REVISE PER P.P.U.D.
5-24-96	ADD F.P.L. CROSSINGS
11-1-95	ADD ENTRANCE TO VIL. 18

DATE	REVISIONS
9/20/96	Revise Per City comments
9/11/96	Add Sidewalk to West R/w
5-6-95	REVISE PER CITY

DESIGNED: G.S.B. DATE: 11-94
DRAWN: K.P.R. DATE: 11-94
CHECKED: DATE:

TOWNGATE

MINTO COMMUNITIES (PEMBROKE), INC. - GENERAL PARTNER

N.W. 15th. STREET

STA. 234+00.00 TO STA. 240+00.00

WINNINGHAM & FRADLEY, INC.
ENGINEERS • PLANNERS • SURVEYORS

APPROVED
DATE

PROJECT NUMBER 94552

SHEET R5 OF 15

NOV 15 1995

FOR CONTINUATION SEE SHEET R4 OF 15

FOR CONTINUATION SEE SHEET R6 OF 15

234 235 240

N. 28° 52' 11" W.

℄ SURVEY
℄ CONSTRUCTION

TRANSITION TO 5' VALLEY GUTTER

TRANSITION TO 5' VALLEY GUTTER

Construct Type 'SP' Storm Inlet Elev. 9.77 Inv. No. 304

(9) STA. 236+62.36, RT
TYPE 'C' INLET
W. 455.620 NAME & GRATE
W. ONE APRON
PER INDEX 235
RT. 550
T. 7.74

(10) STA. 236+62.27, RT
TYPE 'C' INLET
W. 455.620 NAME & GRATE
W. ONE APRON
PER INDEX 235
RT. 550
T. 7.70

(11) STA. 236+62.27
24 DIAMETER MANHOLE
W/ TOP SLAB
W. 455.620 NAME & GRATE
W/ CONC APRON
PER INDEX 200.20
RT. 550
T. 7.15 IN
190 OUT

(12) STA. 236+62.36, LT
TYPE 'C' INLET
W. 455.620 NAME & GRATE
W. ONE APRON
PER INDEX 235
RT. 550
T. 7.74

(8) STA. 238+76.5, RT RT
72 DIA MANHOLE
RT. 6.00
(2) 8" PVC IN
(2) 8" PVC SE
(RUBBER WEDGE OR E MORTAR JOINT)

(3) STA. 239+76.5, LT
72 DIA MANHOLE
RT. 6.00
(1) 8" PVC IN

(4) STA. 239+76.5, RT
72 DIA MANHOLE
RT. 6.00
(1) 8" PVC IN
(1) 8" PVC OUT

10 8 6 4 2 0 -2 -4 -6 -8

0.40% 0.40% 0.40%

8" R.C.P. 8" R.C.P. 8" D.I.P. R.M. 8" R.C.P. 8" W.M. 8" W.M. 8" W.M.

190 205 TOP ± 2.6

234 235 236 237 238 239 240

7-31-96	REVISE PER CITY APP'D	9/20/96	Revise Per City comments	DESIGNED	G.E.B.	DATE	
6-28-95	REVISE PER CITY	9/11/95	Add Sidewalk to West R/W	DRAWN	K.P.R.	DATE	
5-24-95	ADD + RL CROSSING	5-16-95	REVISE PER CITY	CHECKED		DATE	
DATE	REVISION	DATE	REVISION				

TOWNGATE
MINTO COMMUNITIES (PEMBROKE), INC. GENERAL PARTNER

N.W. 15th. STREET
STA. 234+00.00 TO STA. 240+00.00

WINNINGHAM & FRADLEY, INC.
ENGINEERS • PLANNERS • SURVEYORS

APPROVED
BROWARD COUNTY DISTRICT
APPROVED

94552 R5 OF 15

NOV 15 1995

FOR CONTINUATION SEE SHEET RS5 OF 15

FOR CONTINUATION SEE SHEET RS7 OF 15

L5 STA. 244+17.50, 45' LT.
RE. 8.00
I.E. (-)6.30

NOTE: SEE SHEET R13 OF 15 FOR LIFT STATION PLAN AND DETAILS.

1 STA. 244+17.50, 14' LT.
5' DIA. MANHOLE
RE. 6.81
I.E. (-)4.91 S.
(-)4.25 E.
(-)6.07 N.
(-)6.15 W.

2 STA. 241+36.50, 14' RT.
5' DIA. MANHOLE
RE. 5.76
I.E. (-)4.01 S.
(-)4.06 N

5 STA. 245+37.50, 58' RT.
4' DIA. MANHOLE
RE. 6.80
I.E. (-)5.44 NW.
(-)5.39 SE.
PLUG W/BRICK & MORTAR

6 STA. 245+37.50, 14' LT.
5' DIA. MANHOLE
RE. 6.54
I.E. (-)5.66 N,SE
(-)5.71 S

7 STA. 245+76.00, 50' LT.
5' DIA. MANHOLE
RE. 7.00
I.E. (-)5.50 S
(-)5.45 N PLUG W/BRICK & MORTAR

TOWNGATE VILLAGE 12B

TOWNGATE VILLAGE 14

LAKE
D.W.E.=330

E.O.W.

20' LAKE ACCESS & WATER STORAGE EASEMENT

30' DRAINAGE EASEMENT

63'-48" R.C.P.

STA. 244+50
56' X 2'-8" P.V.C.
56' X 1'-2" P.V.C.
(38" COVER) F. P. & L.

	TOP	BOTTOM
FIN. GR.	DRA.	SEWER
7.25	1.77	3.35

REFER TO SHEET R10 OF 15 FOR SECTION

53'-8" P.V.C. at 0.30%

201 L.F. -8" P.V.C. F.M.

R/W LINE

SEWER UNDER DRAINAGE

89'-24" R.C.P.

120 L.F. 8" P.V.C. at 0.30%

MAIN "B"

246

74 L.F. P.V.C. at 0.30%

SEWER UNDER WATER

5' CONC. SIDEWALK

R/W LINE

STA. 244+76.50, 26' RT.
1-8" TEE
1-8" GV.(RESTRAINED)
1-8" PLUG

STA. 244+43.05, 56' RT.
INSTALL BRICK & MORTAR PLUG
I.E.= (-) 2.85

TOWNGATE VILLAGE 17

STA. 244+50.00
END CONSTRUCTION
PHASE 2
BEGIN PHASE 2

NOTE: SIDEWALK ACROSS DRIVEWAY TO BE A MIN. OF 6" THICK W/ 6"x6"-10/10 WWM

STA. 244+28.00, 51' LT.
1-6"x90° BEND

STA. 244+28.00, 32' LT.
1-8"x6" TEE
1-8" PLV.

STA. 244+12.50, 43' LT.
SINGLE WATER SERVICE

68'-1" P.E. TUBING IN SCH. 80 CASING

37 L.F. 10" D.I.P. at 0.40%

84'-48" R.C.P.

SEWER UNDER DRAINAGE

15 L.F. 1" P.V.C. W.M.
18 L.F. 8" D.I.P. W.M.

WM. OVER DRAINAGE

44 L.F. -8" P.V.C. W.M.

RESTRAIN VALVE TO TEE

27'-8" P.V.C. W.M.

8" P.V.C. W.M.

	TOP	BOT.
FIN. GR.	DRA.	WATER
6.56	1.77	2.88

STA. 244+02.50, 25' RT.
1-8" TEE
2-8" GV.'S

STA. 243+91
94' X 7'-2" P.V.C.
(36" COVER) F. P. & L.

STA. 244+02.50, 52' RT.
1-8"X2" TAPPED PLUG
1-2" BLOW-OFF

PROPOSED 30' D.E.

-38.50

STA. 244+92.00
92' X 7'-2" P.V.C.
(36" COVER) F. P. & L.

STA. 244+05
92' X 7'-2" P.V.C.
(36" COVER) F. P. & L.

TOWNGATE VILLAGE 18

NOTE: TO BE CONSTRUCTED WITH PHASE ONE. PLUG NORTH INVERT

STA. 240+00.00, 27' LT.
4' DIA. MANHOLE W/ TOP SLAB W/ U.S.F. RING & LID No. 420
PER F.D.O.T. INDEX 200, 201
POLLUTION RETARDENT BAFFLE
RE. 6.20
I.E. 0.50

STA. 244+61.50, 90' LT.
19' CONCRETE ENDWALL
PER F.D.O.T. INDEX 250
TOP OF ENDWALL = 4.50
I.E. (-)12.65

STA. 241+47.00, 52' LT.
TYPE "C" INLET
W/ 4155-6210 FRAME & GRATE
W/ CONCRETE APRON
PER F.D.O.T. INDEX 232
RE. 5.50
I.E. 2.75

STA. 241+47.00, 52' RT.
TYPE "C" INLET
W/ 4155-6210 FRAME & GRATE
W/ CONCRETE APRON
PER F.D.O.T. INDEX 232
RE. 5.50
I.E. 2.75

3' TYP.
℄ INLET

	BOT.	TOP
FIN. GR.	DRA.	SEWER
6.25	2.16	1.16

25'-15" R.C.P.

18'-8" D.I.P. F.M.

F.M. UNDER DRAINAGE

25' LANDSCAPE BUFFER, DRAINAGE & UTILITY EASEMENT

8" F.M.

5' CONC. SIDEWALK

2' VALLEY GUTTER

261 L.F. 8" P.V.C. at 0.30%

P.G.L. LT.

TYPE "D" CURB

P.G.L. RT.

2' VALLEY GUTTER

8" W.M.

5' CONC. SIDEWALK

25' LANDSCAPE BUFFER, DRAINAGE & UTILITY EASEMENT

R/W LINE

240 L.F. 8" F.M.

3/3'-24" R.C.P.

261 L.F. 8" P.V.C. at 0.30%

MAIN "A"

240

N. 28°52'11" W.

℄ SURVEY
℄ CONSTRUCTION

54"-15" R.C.P.

W.M. UNDER DRAINAGE

34'-8" D.I.P. W.M.

25'-15" R.C.P.

240 L.F. 8" W.M.

STA. 241+35, 26' RT.
8"X45° BEND

STA. 241+38, 31' RT.
8"X45° BEND

STA. 241+59, 26' RT.
8"X45° BEND

STA. 241+56, 31' RT.
8"X45° BEND

	BOT.	TOP
FIN. GR.	DRA.	WATER
5.50	2.52	1.52

STA. 241+47.00, 27' LT.
TYPE "C" INLET
W/ 4155-6210 FRAME & GRATE
W/ CONCRETE APRON
PER F.D.O.T. INDEX 232
RE. 5.50
I.E. 2.70

STA. 241+47.00, 27' LT.
5' DIA. MANHOLE W/ TOP SLAB & P.R.B.
W/ 4155-6210 FRAME & GRATE
W/ CONCRETE APRON
PER F.D.O.T. INDEX 200, 201
RE. 5.50
I.E. 2.25 E.,W.
1.50 N.

STA. 241+61.50, 27' LT.
TYPE "J" BOX (60"X48")
W/ TOP SLAB & CONC APRON
W/ RING & COVER No. 470
F.D.O.T. INDEX 200, 201
RE. 7.00
I.E. 1.25 S.
0.50 N
(-) 2.65 E.,W.

NOTE: TO BE CONSTRUCTED WITH PHASE ONE. PLUG NORTH INVERT

STA. 245+80.00, 27' LT.
4' DIA. MANHOLE W/ TOP SLAB
W/ U.S.F. RING & LID No. 420
PER F.D.O.T. INDEX 200, 201
POLLUTION RETARDENT BAFFLE
RE. 6.20
I.E. 0.50

STA. 244+61.50, 90' LT.
19' CONCRETE ENDWALL
PER F.D.O.T. INDEX 250
TOP OF ENDWALL = 4.50
I.E. (-)12.65

STA. 241+47.00, 52' LT.
TYPE "C" INLET
W/ 4155-6210 FRAME & GRATE
W/ CONCRETE APRON
PER F.D.O.T. INDEX 232
RE. 5.50
I.E. 2.75

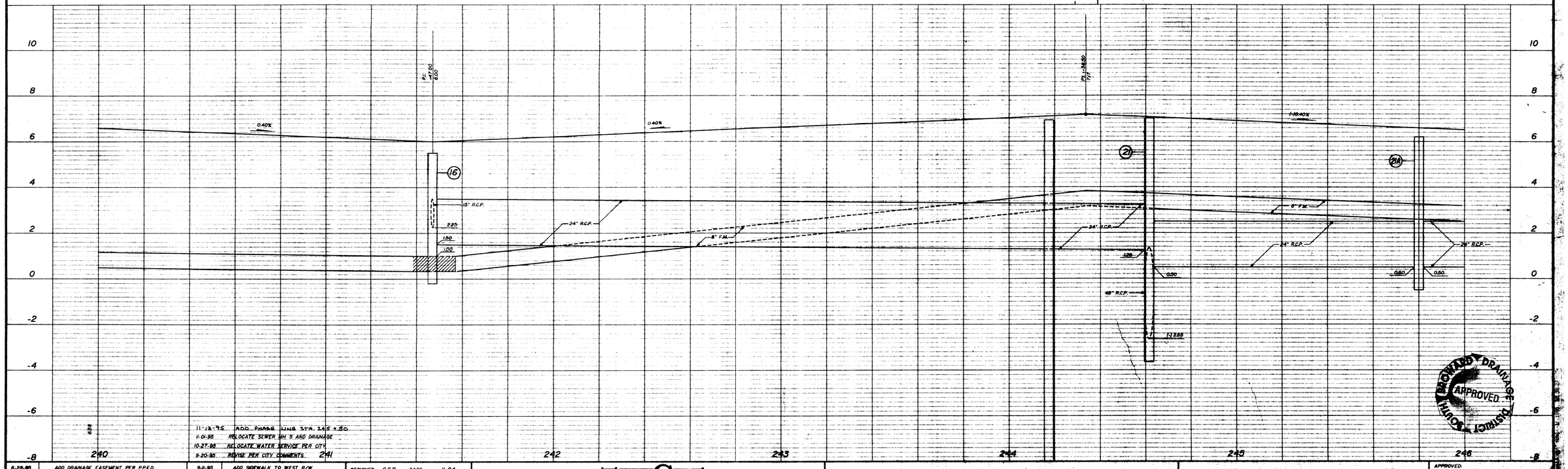

11-13-95 ADD DRAINAGE LINE STA. 245+50
11-01-95 RELOCATE SEWER MH 5 AND DRAINAGE
10-27-95 RELOCATE WATER SERVICE PER CITY
9-20-95 REVISE PER CITY COMMENTS

DATE	REVISIONS	DATE	REVISIONS
6-28-95	ADD DRAINAGE EASEMENT PER P.P.E.D.	9-11-95	ADD SIDEWALK TO WEST R/W
6-27-95	REVISE PER C.D.P.P.U.D.	9-06-95	REVISE PER CITY
5-24-95	ADD F.P.L. CROSSINGS	8-25-95	REVISE PER C.D.P.P.U.D.

DESIGNED: G.S.B. DATE: 11-94
DRAWN: K.P.R. DATE: 11-94
CHECKED: DATE:

TOWNGATE
MINTO COMMUNITIES (PEMBROKE), INC. - GENERAL PARTNER

N.W. 151th. STREET
STA. 240+00.00 TO STA. 246+00.00

WINNINGHAM & FRADLEY, INC.
ENGINEERS • PLANNERS • SURVEYORS

APPROVED:
DATE:
PROJECT NUMBER 94562
SHEET 6B OF 15

APPROVED DRAINAGE DISTRICT SOUTH

NOV 15 1995

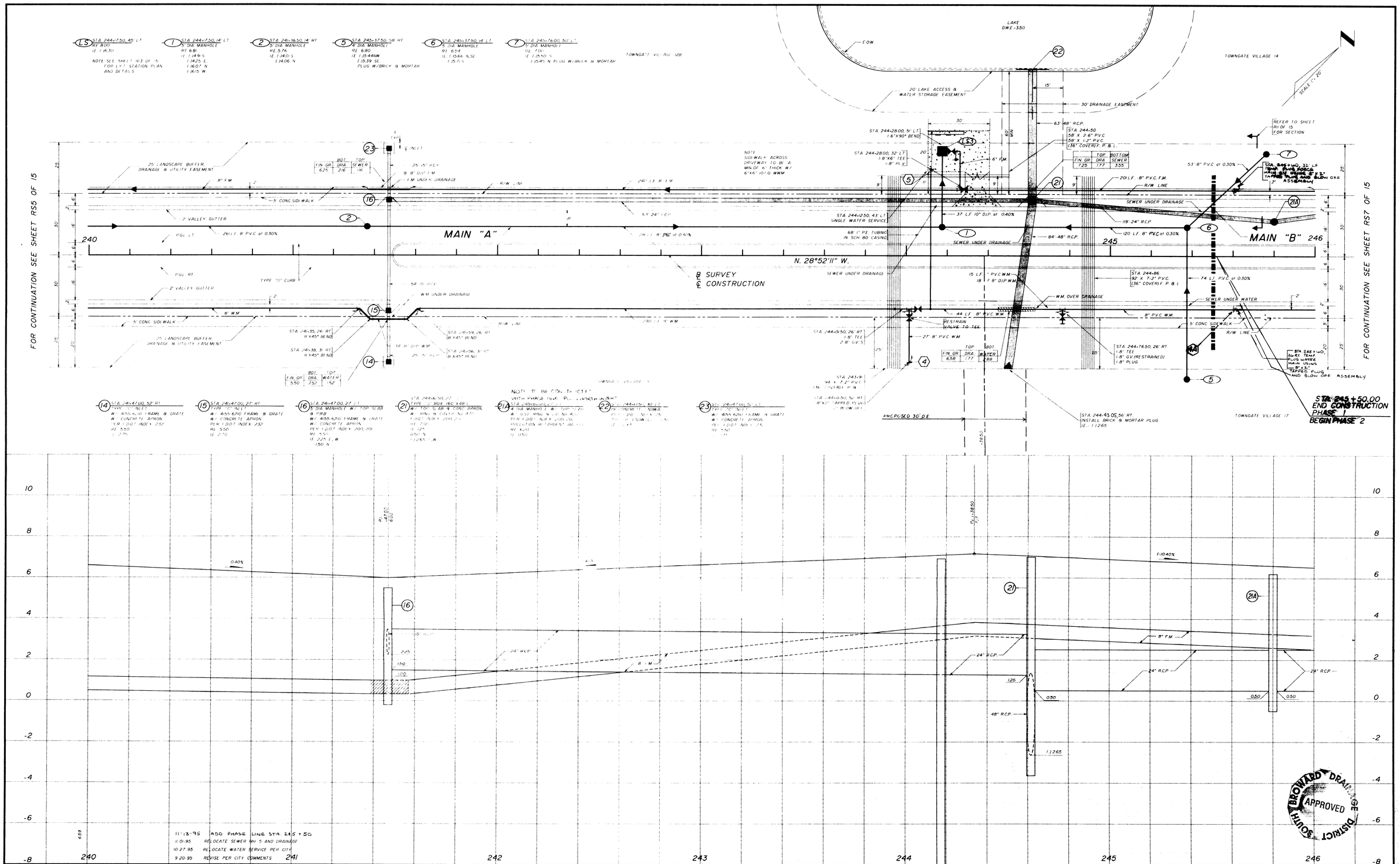

FOR CONTINUATION SEE SHEET RS5 OF 15

FOR CONTINUATION SEE SHEET RS7 OF 15

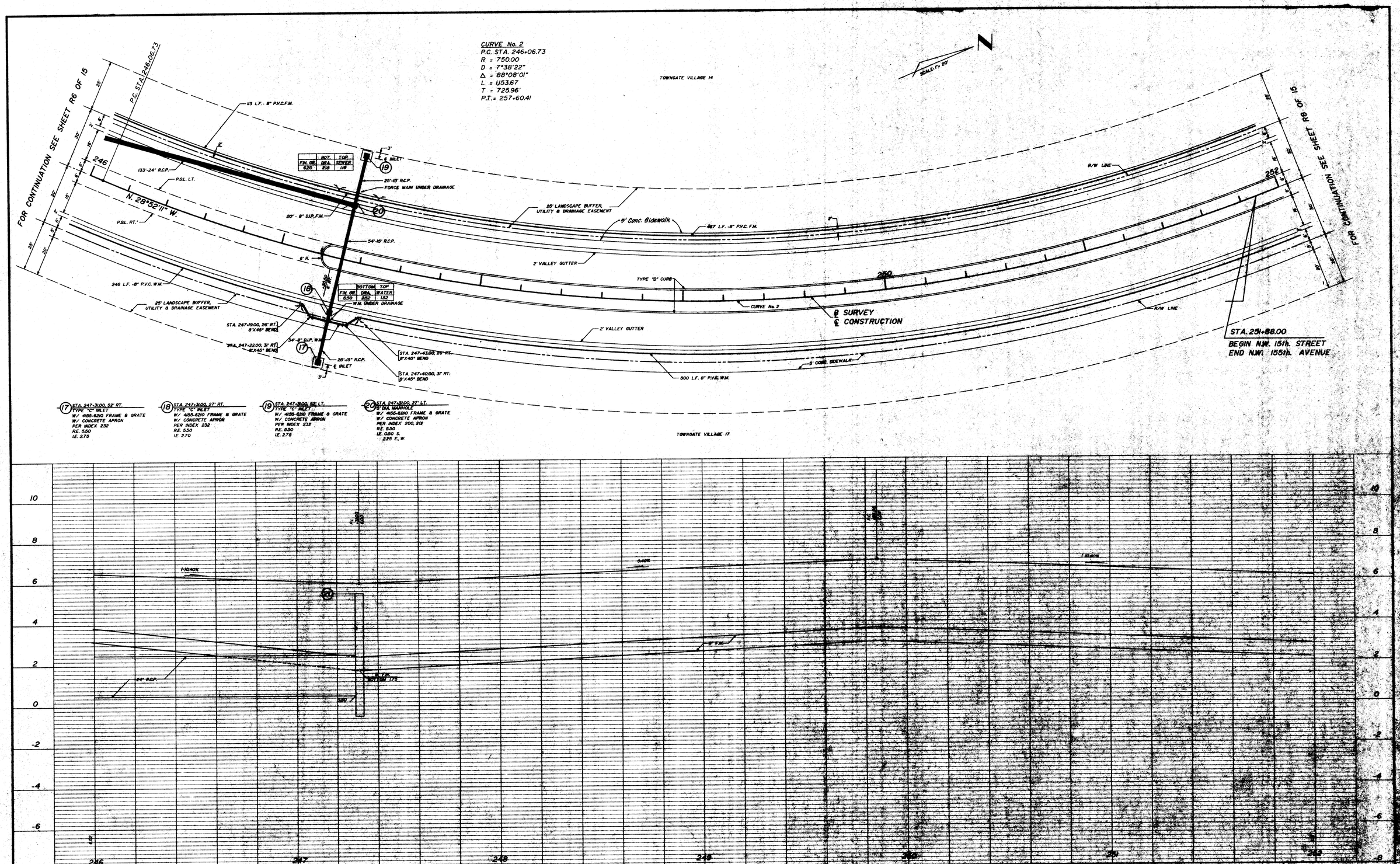

	BOT.	TOP
FIN. GR.	DRA.	SEWER
6.25	2.18	1.18

	BOTTOM	TOP
FIN. GR.	DRA.	WATER
5.50	2.52	1.52

(17) STA. 247+31.00, 52' RT.
TYPE "C" INLET
W/ 4155-6210 FRAME & GRATE
W/ CONCRETE APRON
PER INDEX 232
R.E. 5.50
I.E. 2.75

(18) STA. 247+31.00, 27' RT.
TYPE "C" INLET
W/ 4155-6210 FRAME & GRATE
W/ CONCRETE APRON
PER INDEX 232
R.E. 5.50
I.E. 2.70

(19) STA. 247+31.00, 52' LT.
TYPE "C" INLET
W/ 4155-6210 FRAME & GRATE
W/ CONCRETE APRON
PER INDEX 232
R.E. 5.50
I.E. 2.75

(20) STA. 247+31.00, 27' LT.
15' DIA. MANHOLE
W/ 4155-6210 FRAME & GRATE
W/ CONCRETE APRON
PER INDEX 200, 201
R.E. 5.50
I.E. 0.50 S.
2.25 E., W.

DATE	REVISIONS	DATE	REVISIONS
9/11/95	Add Sidewalk to West R/W		
6-27-95	ADD CHANGE FROM 155th. STREET TO 15th. STREET		

DESIGNED: G.S.B. DATE: 11-94
DRAWN: K.P.R. DATE: 11-94
CHECKED: DATE:

TOWNGATE
MINTO COMMUNITIES (PEMBROKE), INC. - GENERAL PARTNER

N.W. 15th. STREET
STA. 246+00.00 TO STA. 252+00.00

WINNINGHAM & FRADLEY, INC.
ENGINEERS - PLANNERS - SURVEYORS

APPROVED:
SHEET 94052 R7 OF 15

FEB 10 1995

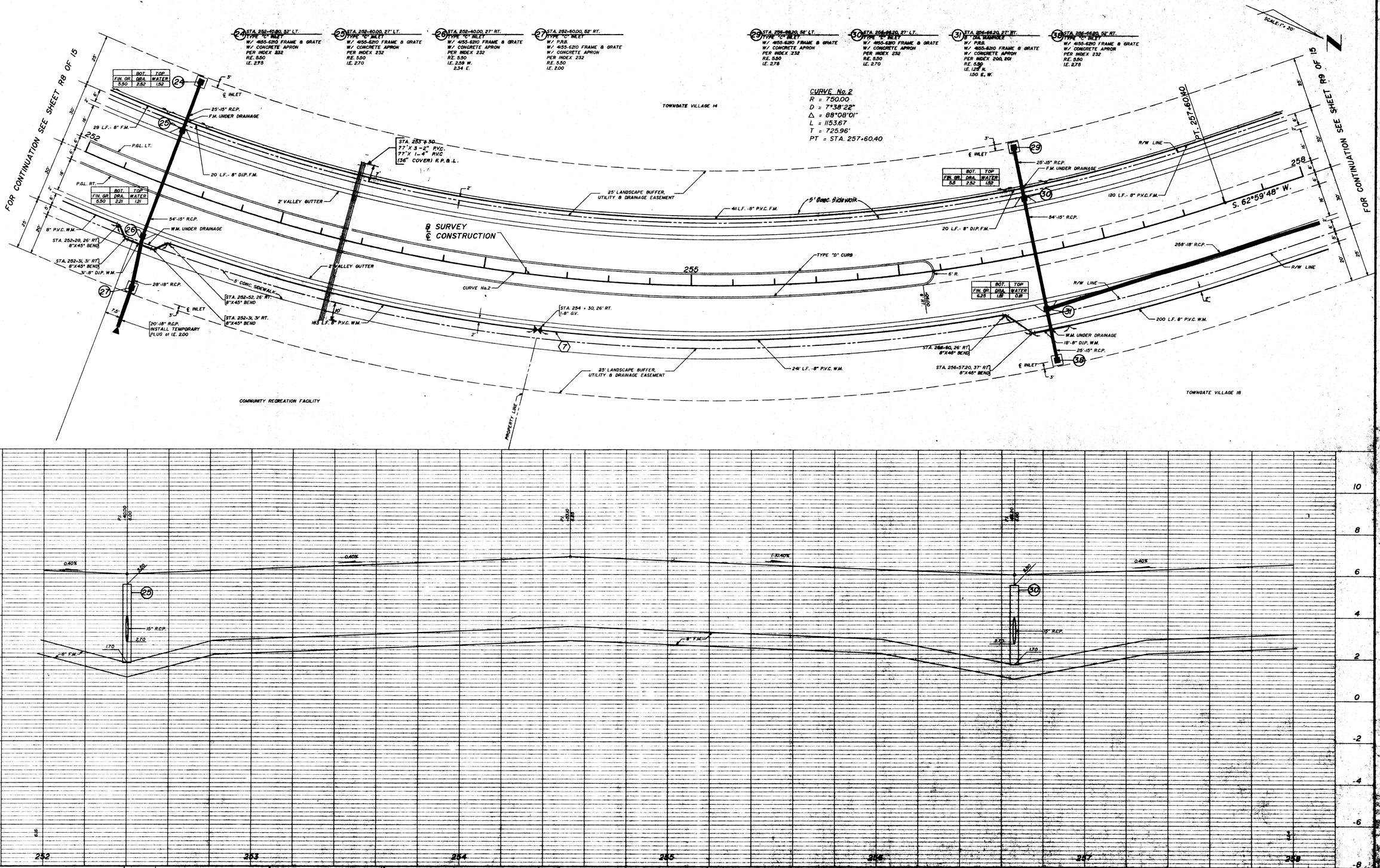

DATE	REVISIONS	DATE	REVISIONS
9/11/95	Add Sidewalk to West R/W		
1.	ADD F.P.&L. CROSSING	5/24/95	

DESIGNED: G.S.B. DATE: 11-94
DRAWN: K.P.R. DATE: 11-94
CHECKED: DATE:

TOWNGATE
MINTO COMMUNITIES (PEMBROKE), INC. - GENERAL PARTNER

N.W. 16th. STREET
STA. 252+00.00 TO STA. 258+00.00

WINNINGHAM & FRADLEY, INC.
ENGINEERS - PLANNERS - SURVEYORS

APPROVED:
DATE:
PROJECT NUMBER 94552
SHEET R8 OF 15

SEP 13 1995

FOR CONTINUATION SEE SHEET R8 OF 15

FOR CONTINUATION SEE SHEET R10 OF 15

SCALE: 1" = 20'

STA. 258+61.00, 32' LT.
1-8"X2" TAPPED PLUG
1-2" BLOW-OFF

STA. 258+53
94' X 5-2" P.V.C.
(36" COVER) F. P. & L.

77 L.F. - 8" P.V.C. F.M.

TRANSITION FROM TYPE "F" CURB & GUTTER TO VALLEY GUTTER

F.M. UNDER WATER MAIN

STA. 258+77, 32' LT.
8" X 90° BEND

Construct Curb Cut Ramp Per FDOT Index No. 304

P.G.L. LT.

P.G.L. RT.

63'-8" P.V.C. W.M.

8"-48" R.C.P.

258

260

S. 62°59'48" W.

℄ SURVEY
℄ CONSTRUCTION

TO L.F. - 8" P.V.C. F.M.

25'-8" D.I.P. W.M.

18" R.C.P.

20 L.F.-8" D.I.P. F.M.

	BOTTOM	BOTTOM	TOP
FIN. GR.	DRA.	WATER	F.M.
6.25	.02	2.50	(-).00

2-8"X45° BENDS

F.M. UNDER WATER MAIN

76'-8" P.V.C. W.M.
RESTRAIN O/T TO TEE

8" P.V.C. W.M.

RESTRAIN O/T TO CROSS

18'-8" P.V.C. W.M.

30"-48" R.C.P.

STA. 258+61.00, 36' RT.
1-8" CROSS
3-8" G.V.'S

STA. 258+61.00, 54' RT.
1-8"X2" TAPPED PLUG
1-2" BLOW-OFF

STA. 258+77, 58' RT.
8" PLUG

	TOP	BOTTOM
FIN. GR.	DRA.	WATER
6.94	1.64	3.27

STA. 258+33.00, 55' LT.
INSTALL BRICK & MORTAR PLUG
AT I.E.(-) 2.90

STA. 259+37, 52' LT.
8"X2" TAPPED PLUG
2" BLOW-OFF

STA. 259+37.00, 26' LT.
1-8" TEE
1-8" G.V.

STA. 259+46
94' X 5-2" P.V.C.
(36" COVER) F. P. & L.

Construct Curb Cut Ramp Per FDOT Index No. 304

35' R.

38'-8" P.V.C. W.M.

25'-8" D.I.P. W.M.

38' R.

214'-24" R.C.P.

2" VALLEY GUTTER

25' LANDSCAPE BUFFER, UTILITY & DRAINAGE EASEMENT

	TOP	BOTTOM
FIN. GR.	DRA.	WATER
6.47	2.21	3.30

W.M. OVER DRAINAGE

18"-8" P.V.C. W.M.

STA. 259+37, 36' RT.
1-8" TEE
3-8" G.V.'S

STA. 259+37, 54' RT.
1-8"X6" TEE
1-6" G.V.
1-FIRE HYDRANT (STA.259+45, 54' RT.)
8"X2" TAPPED PLUG
2" BLOW-OFF

STA. 259+33.00, 56' RT.
INSTALL BRICK & MORTAR PLUG
AT I.E.(-) 2.90

TOWNGATE VILLAGE 14

196'-8" P.V.C. W.M.

25' LANDSCAPE BUFFER, UTILITY & DRAINAGE EASEMENT

20'-8" D.I.P. W.M. OVER DRAINAGE

STA. 261+36, 27.5' LT.
8"X45° BEND

STA. 261+32, 29' LT.
8"X45° BEND

℄ INLET

25'-18" R.C.P.

STA. 261+46.5, 27.5' LT.
18" X 45° BEND

STA. 261+46, 32' LT.
18" X 45° BEND

	TOP	BOT.
FIN. GR.	WATER	DRAIN.
5.65	1.80	2.50

54'-18" R.C.P.

5' Conc. Sidewalk

R/W LINE

TYPE "D" CURB

264

6' R.

196'-18" R.C.P.

26'-18" R.C.P.

5' CONC. WALK

R/W LINE

TOWNGATE VILLAGE 16

TOWNGATE VILLAGE 15

(32) STA. 263+3.88, 39' RT.
TYPE "C" INLET
W/ 4155-6210 FRAME & GRATE
W/ CONCRETE APRON
R.E. 8.10
I.E. 6.00

(33) STA. 261+40.87, 52' LT.
TYPE "C" INLET
W/ 4155-6210 FRAME & GRATE
W/ CONCRETE APRON
PER F.D.O.T. INDEX 232
R.E. 5.50
I.E. 2.75

(34) STA. 261+40.87, 27' LT.
TYPE "C" INLET
W/ 4155-6210 FRAME & GRATE
W/ CONCRETE APRON
PER F.D.O.T. INDEX 232
R.E. 5.50
I.E. 2.70

(35) STA. 261+40.87, 52' RT.
TYPE "C" INLET
W/ 4155-6210 FRAME & GRATE
W/ CONCRETE APRON
PER F.D.O.T. INDEX 232
R.E. 5.50
I.E. 2.75

(36) STA. 261+40.87, 27' RT.
TYPE "J" BOX (48"X48")
W/ P.R.B.
W/ TOP SLAB
W/ 4155-6210 FRAME & GRATE
W/ CONCRETE APRON
PER F.D.O.T. INDEX 200
R.E. 5.50
I.E. 0.00 E.
1.58 N. S. W.

(37) STA. 259+33.00, 26' RT.
TYPE "J" BOX (80"X48")
W/ TOP SLAB
W/ U.S.F. 420 RING & LID
PER F.D.O.T. INDEX 200, 201
R.E. 6.40
I.E. 1-12.90
0.00 E. W.

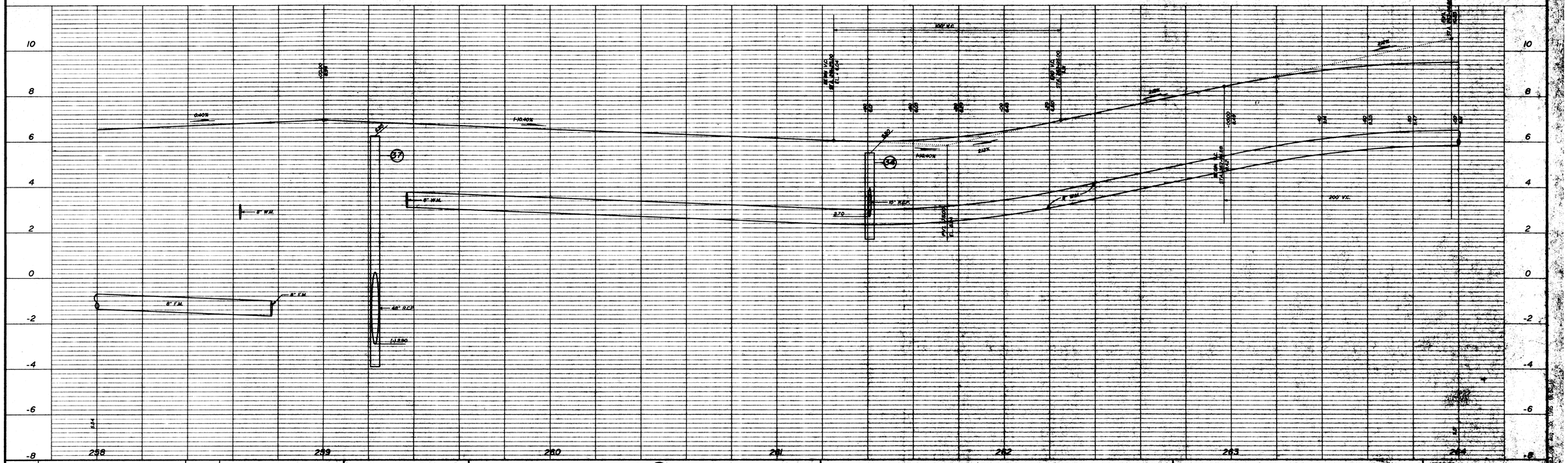

DATE	REVISIONS
8-29-95	REVISE PER PEMBROKE PINES
6-29-95	MOVE W.M. TO SOUTH SIDE ROAD
5-24-95	ADD F.P.L. CROSSINGS
9/11/95	Add Sidewalk to West R/W

DESIGNED: G.S.B. DATE: 11-94
DRAWN: K.P.R. DATE: 11-94
CHECKED: DATE:

TOWN GATE
MINTO COMMUNITIES (PEMBROKE), INC. - GENERAL PARTNER

N.W. 15th. STREET
STA. 258+00.00 TO STA. 264+00.00

WINNINGHAM & FRADLEY, INC.
ENGINEERS - PLANNERS - SURVEYORS

APPROVED
DATE:
PROJECT NUMBER 94-5520
SHEET R9 OF 15

SEP 13 1995

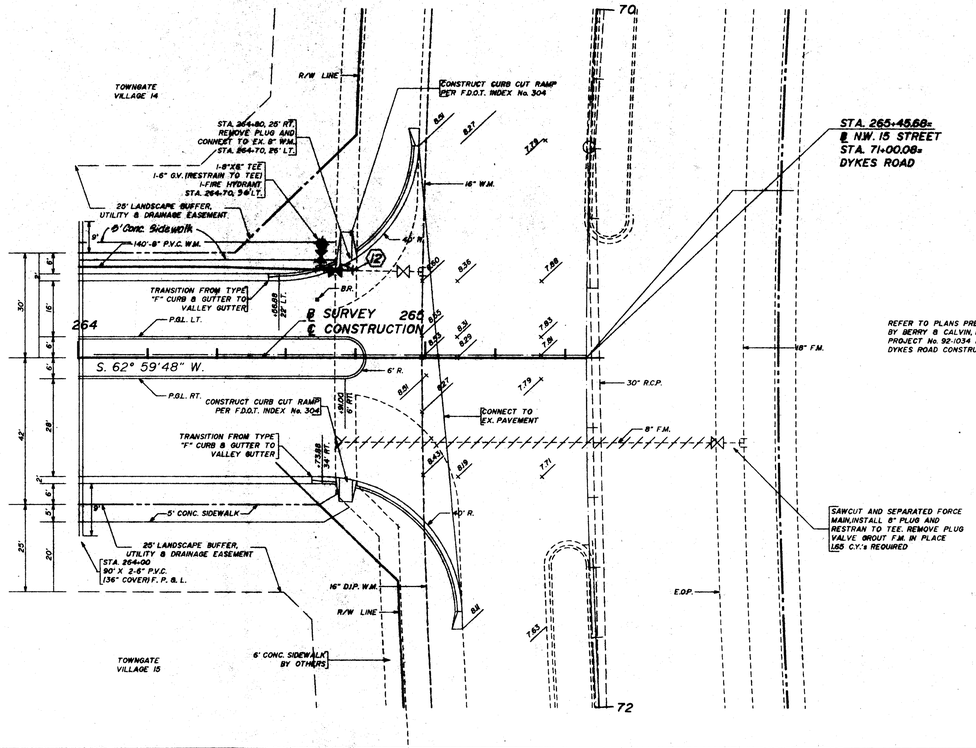

DATE	REVISIONS	DATE	REVISIONS
8/2/95	REVISE PER CITY P.F.U.D.		
6/26/95	ADD CURB CUT RAMPS TO DYKES		
6/24/95	ADD F.P.L. CROSSING	9/11/95	Add Sidewalk to West R/W

DESIGNED: G.S.B. DATE: 11-94
DRAWN: K.P.R. DATE: 11-94
CHECKED: DATE:

TOWN GATE
MINTO COMMUNITIES (PEMBROKE), INC. - GENERAL PARTNER

N.W. 15th. STREET
STA. 264+00.00 TO STA. 265+45.68

WINNINGHAM & FRADLEY, INC.
ENGINEERS - PLANNERS - SURVEYORS

APPROVED:
DATE:
PROJECT NUMBER 94552
SHEET NO OF 15

SEP 13 1995

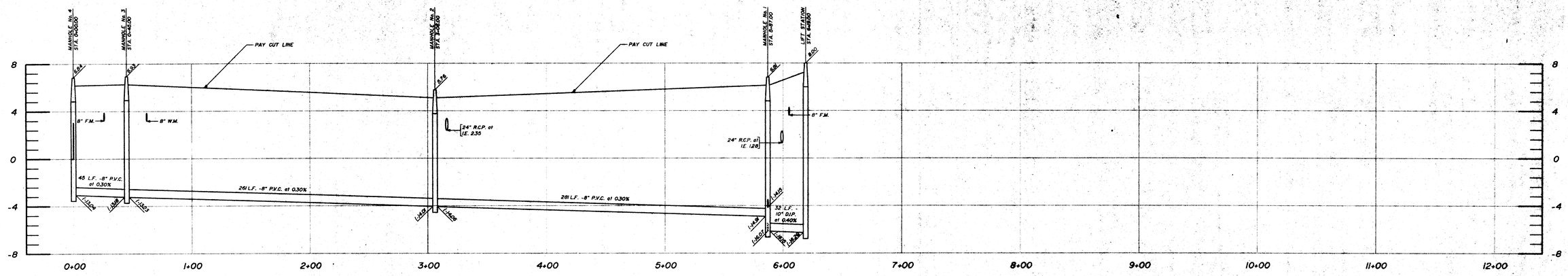

MAIN "A"

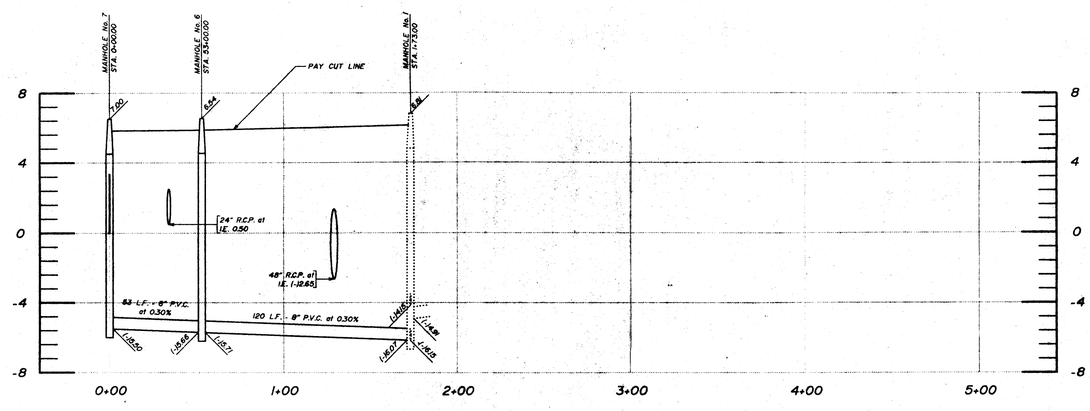

MAIN "B"

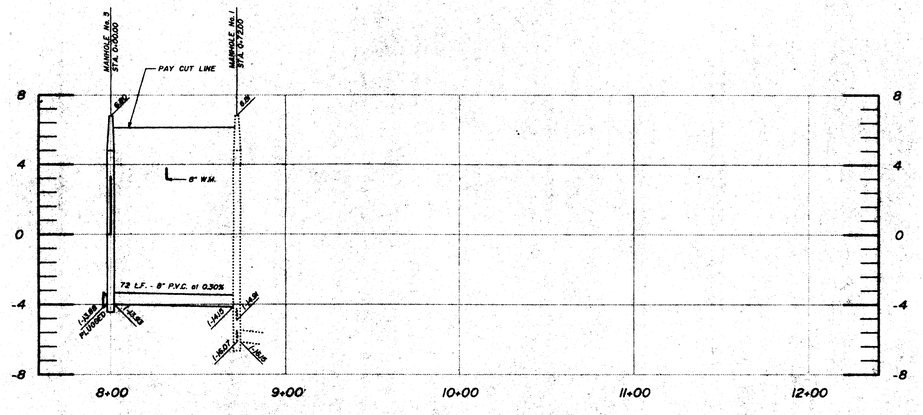

LAT "B-1"

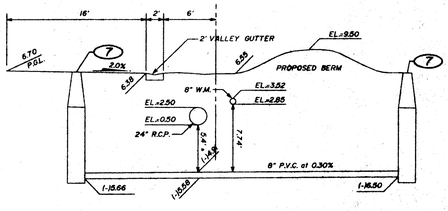

SECTION

STA.245-37.5 TO STA.245-76.00

HORIZONTAL SCALE: 1"=40'
VERTICAL SCALE: 1"=4'

SEWAGE COLLECTION SYSTEM
PROFILES

TOWNGATE - N.W. 15th STREET

MINTO COMMUNITIES (PEMBROKE) INC.

WINNINGHAM & FRADLEY, INC.
ENGINEERS - PLANNERS - SURVEYORS

NO.	REVISIONS	DATE
2.	REVISE INVERT AT LIFT STATION	8/29/96
1.	REVISE PER P.P.U.D.	6/27/96

DESIGNED: G.S.B. DATE: 12/1994
DRAWN: K.P.R. DATE: 12/1994
CHECKED: DATE:
APPROVED:
PROJECT NUMBER 94552
SHEET 7 OF 15

SEP 13 1995

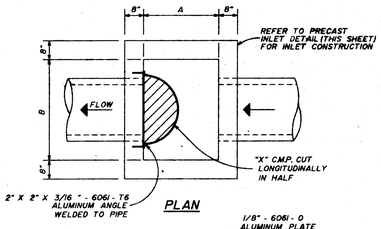

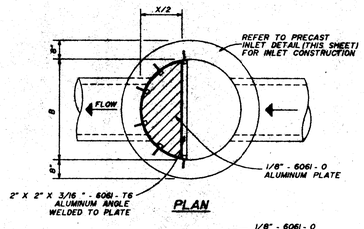

BAFFLE SCHEDULE					
D	A	B	C	E	X
15"	24"	37"	2'-3"	1'-0"	18"
18"	24"	37"	2'-6"	1'-0"	24"
21"	36"	36"	2'-9"	1'-3"	27"
24"	36"	36"	3'-0"	1'-5"	30"
30"	36"	42"	3'-6"	1'-7"	36"
36"	42"	54"	4'-0"	2'-2"	48"
42"	48"	60"	4'-8"	2'-6"	54"
48"	48"	66"	5'-0"	2'-10"	60"

POLLUTION RETARDANT BASIN DETAIL

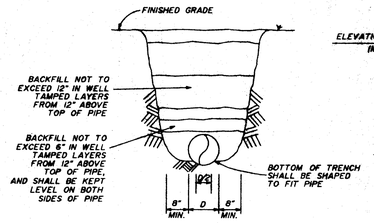

PIPE BEDDING DETAIL

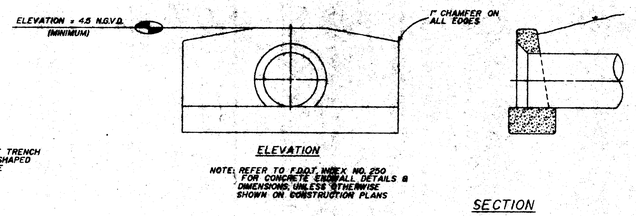

NOTE: REFER TO F.D.O.T. INDEX NO. 250 FOR CONCRETE ENDWALL DETAILS & DIMENSIONS, UNLESS OTHERWISE SHOWN ON CONSTRUCTION PLANS

PRECAST CONCRETE ENDWALL DETAIL

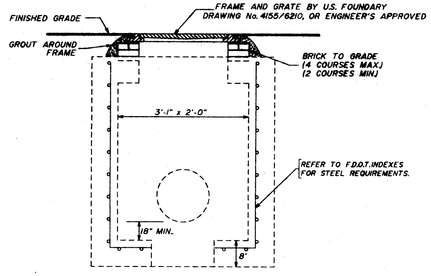

NOTE: 18" X 18" SUMP TO BE INSTALLED WHEN INLET BOTTOM IS ABOVE WATER TABLE

PRECAST INLET DETAIL

NOTE: SEE CONSTRUCTION PLANS FOR BASIN TYPE B F.D.O.T. "ROADWAY AND TRAFFIC DESIGN STANDARDS," LATEST REVISION FOR DETAILS

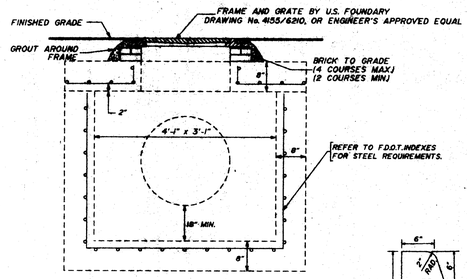

TYPE "D" INLET

NOTE: SEE CONSTRUCTION PLANS FOR BASIN TYPE B F.D.O.T. "ROADWAY AND TRAFFIC DESIGN STANDARDS," LATEST REVISION FOR DETAILS

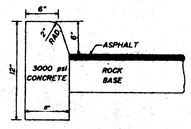

TYPE "D" CURB DETAIL

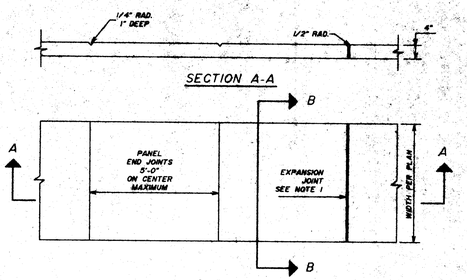

SIDEWALK NOTES:

1. EXPANSION JOINT SHALL BE NON-RISING PRE-MOLDED MASTIC. 20'-0" O.C.
2. CONCRETE SHALL BE 3000 psi AND HAVE A BROOM FINISH.

SIDEWALK DETAILS

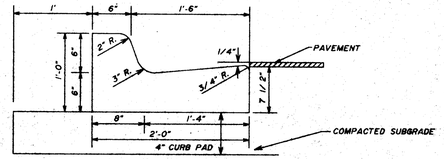

NOTE: WHEN USED ON HIGH SIDE OF ROADWAY, THE CROSS SLOPE OF THE GUTTER SHALL MATCH THE CROSS SLOPE OF THE ADJACENT PAVEMENT AND THE THICKNESS OF THE LIP SHALL BE 6", UNLESS OTHERWISE SHOWN ON PLANS.

TYPE "F" CURB & GUTTER DETAIL

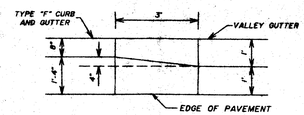

CURB TRANSITION DETAIL

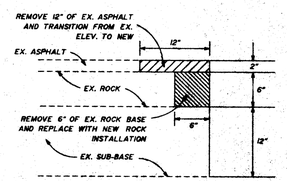

ASPHALT CONNECTION DETAIL

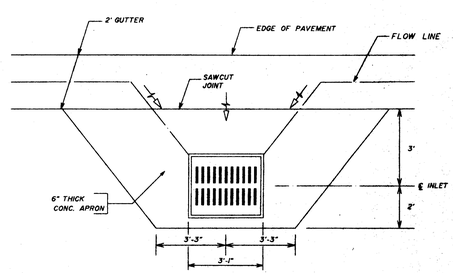

APRON DETAIL

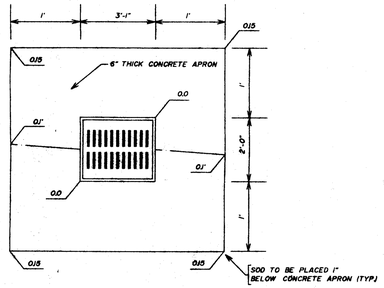

REAR YARD APRON DETAIL

NOTE: SODDED BERMS MEANDER WITHIN LIMITS SHOWN. REFER TO LANDSCAPE PLANS PREPARED BY MIKE PETROW AND ASSOCIATES FOR EXACT LOCATION AND HEIGHT.

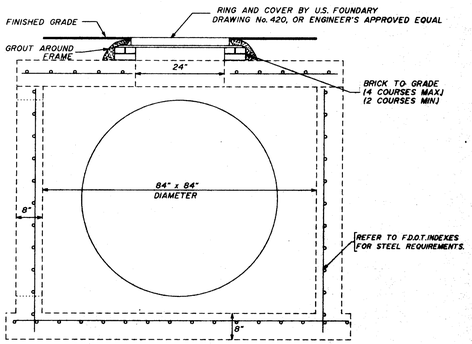

7'-0 DIAMETER MANHOLE DETAIL

NOTE: SEE CONSTRUCTION PLANS FOR BASIN TYPE B F.D.O.T. "ROADWAY AND TRAFFIC DESIGN STANDARDS," LATEST REVISION FOR DETAILS

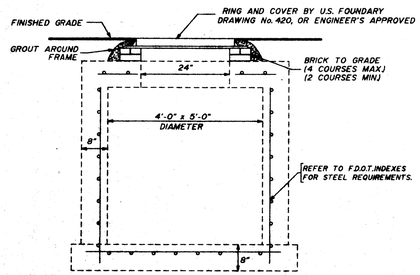

4'-0 OR 5'-0 DIAMETER MANHOLE DETAIL

NOTE: SEE CONSTRUCTION PLANS FOR BASIN TYPE B F.D.O.T. "ROADWAY AND TRAFFIC DESIGN STANDARDS," LATEST REVISION FOR DETAILS

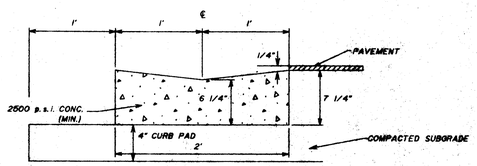

2' CONCRETE VALLEY GUTTER

ROADWAY IMPROVEMENT
DETAILS
N.W. 15th. STREET
TOWNGATE LIMITED PARTNERSHIP

NO.	REVISIONS	DATE	CHECKED:	DATE:	PROJECT NUMBER 94552
2.	REMOVE CONFLICT M.H. & RAMP PER S.B.D.D.	7/21/95	DESIGNED: G.S.B.	DATE: 12/94	APPROVED:
1.	REVISE SUMP DEPTH ON DRAINAGE STA PER S.B.D.D.	6/26/95	DRAWN: D.D.D.	DATE: 12/94	

WINNINGHAM & FRADLEY, INC.
ENGINEERS - PLANNERS - SURVEYORS

SHEET NO. 15 OF 15

SEP 13 1995

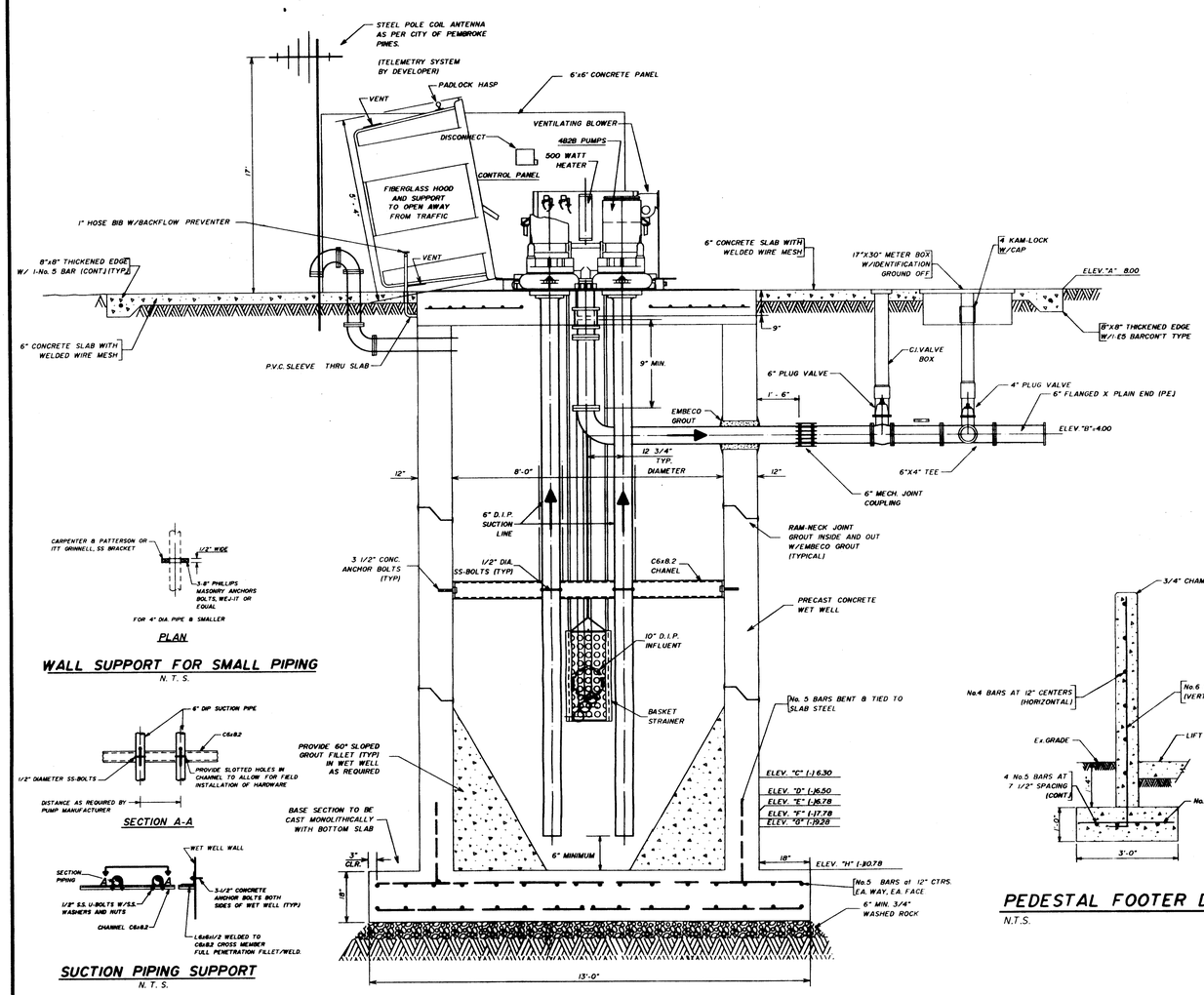

ELEVATION
SCALE 1/2" = 1'-0"

PLAN

WALL SUPPORT FOR SMALL PIPING
N. T. S.

SECTION A-A

SUCTION PIPING SUPPORT
N. T. S.

NOTES:
1. STEEL CHANNELS AND ANGLES SHALL BE ASTM A-36 STEEL.
2. WELDING SHALL BE PERFORMED IN ACCORDANCE WITH THE A.W.S. STANDARDS.
3. ALL HARDWARE SHALL BE 316 STAINLESS STEEL.
4. PAINT THE SUCTION PIPING SUPPORTS WITH TWO COATS OF KOPPERS BITUMASTIC 300-M.
5. SUCTION PIPING SHALL BE CAPLABLE OF BEING FULLY SUPPORTED BY THE SUCTION PIPING SUPPORTS.

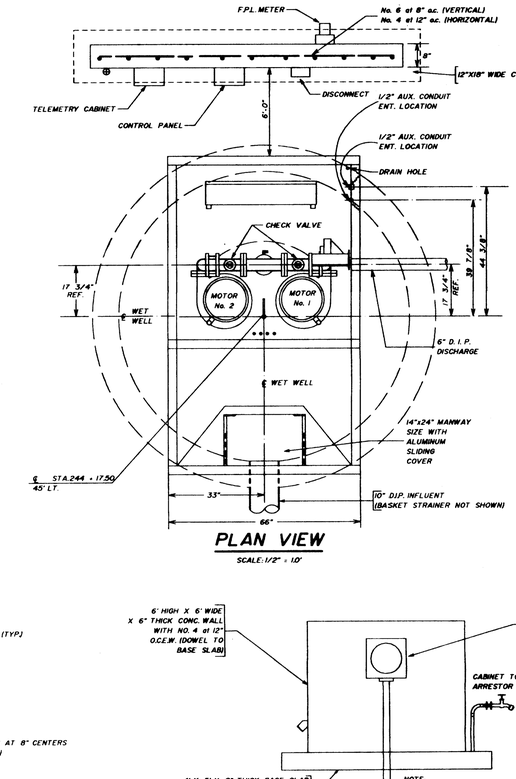

PLAN VIEW
SCALE: 1/2" = 1'0"

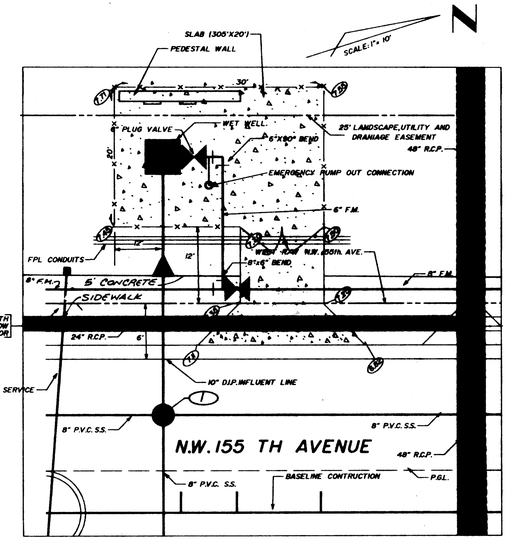

LOCATION SKETCH

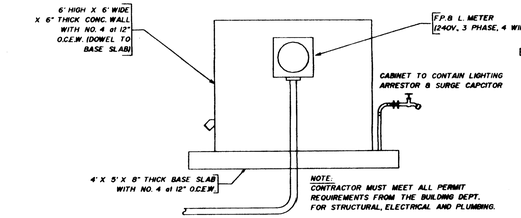

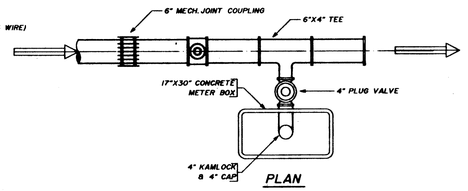

PLAN

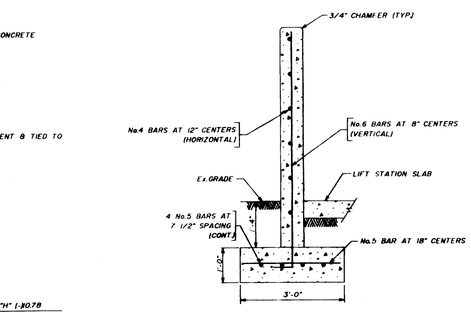

PEDESTAL FOOTER DETAIL
N.T.S.

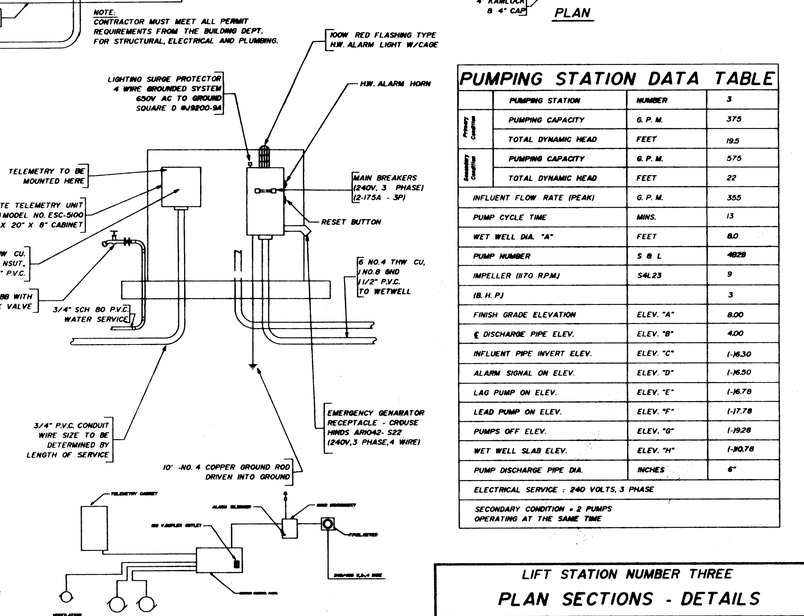

ELECTRIC RISER

PUMPING STATION DATA TABLE

	PUMPING STATION	NUMBER	3
Primary Condition	PUMPING CAPACITY	G. P. M.	375
	TOTAL DYNAMIC HEAD	FEET	19.5
Secondary Condition	PUMPING CAPACITY	G. P. M.	575
	TOTAL DYNAMIC HEAD	FEET	22
INFLUENT FLOW RATE (PEAK)		G. P. M.	355
PUMP CYCLE TIME		MINS.	13
WET WELL DIA. "A"		FEET	8.0
PUMP NUMBER		S & L	4828
IMPELLER (870 R.P.M.)		S4L23	9
(B. H. P.)			3
FINISH GRADE ELEVATION		ELEV. "A"	8.00
℄ DISCHARGE PIPE ELEV.		ELEV. "B"	4.00
INFLUENT PIPE INVERT ELEV.		ELEV. "C"	(-)6.30
ALARM SIGNAL ON ELEV.		ELEV. "D"	(-)6.50
LAG PUMP ON ELEV.		ELEV. "E"	(-)6.78
LEAD PUMP ON ELEV.		ELEV. "F"	(-)7.78
PUMPS OFF ELEV.		ELEV. "G"	(-)9.28
WET WELL SLAB ELEV.		ELEV. "H"	(-)10.78
PUMP DISCHARGE PIPE DIA.		INCHES	6"
ELECTRICAL SERVICE : 240 VOLTS, 3 PHASE			
SECONDARY CONDITION = 2 PUMPS OPERATING AT THE SAME TIME			

LIFT STATION NOTES:

1. ALL CONCRETE SHALL HAVE A COMPRESSION STRENGTH OF 4000 psi AT 28 DAYS.
2. REINFORCING STEEL SHALL CONFORM WITH ASTM SPECIFICATION A-115, AND SHALL BE DEFORMED TO CONFORM TO ASTM SPECIFICATION 305.
3. THE PRECAST WET WELL, 96" I.D., SHALL CONFORM WITH ASTM SPECIFICATION C-478, EXCEPT THE WALL THICKNESS SHALL BE 12".
4. THE INSIDE AND OUTSIDE WALLS SHALL RECEIVE TWO COATS OF KOPPERS BITUMASTIC NUMBER 300-M, OR APPROVED EQUAL.
5. THE SEWAGE PUMPS SHALL BE SMITH LOVELESS, INC. MODEL NUMBER 4828 WITH A 6" DISCHARGE, EACH UNIT SHALL BE EQUIPPED WITH A 3 B.H.P., 240 VOLT, 3 PHASE, MOTOR CAPABLE OF DELIVERING 375 GALLONS PER MINUTE AT 19.5 FEET, TOTAL DYNAMIC HEAD.
6. OPENINGS FOR THE PIPING IN THE WET WELL SHALL BE CAST AT THE TIME OF FABRICATION. SECTION JOINTS SHALL NOT BE CLOSER THAN 12" FROM ANY PIPE OPENING.
7. DURING CONSTRUCTION, THE CONTRACTOR SHALL TAKE ALL NECESSARY PRECAUTIONS AGAINST FLOTATION OF THE WET WELL UNTIL ALL BACKFILL IS IN PLACE.
8. FOR ADDITIONAL NOTES SEE SHEET GN1 OF 1.
9. THE ELECTIRCAL SYSTEM SHALL BE PROVIDED WITH A "SQUARE D" LIGHTNING SURGE ARRESTOR (EJ9200-9A)
10. ALL OPENINGS AND PASSAGES SHALL BE LARGE ENOUGH TO PERMIT THE PASSAGE OF A MINIMUM 3" DIAMETER SPHERE

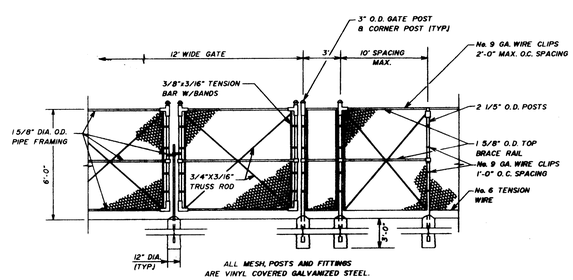

ALL MESH, POSTS AND FITTINGS ARE VINYL COVERED GALVANIZED STEEL.

FENCE & GATE DETAIL
N. T. S.

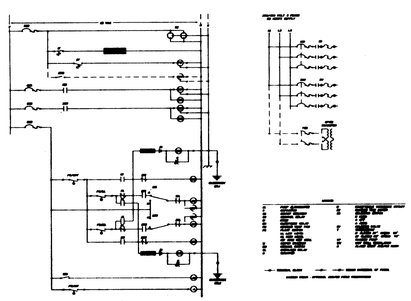

ELECTRICAL SCHEMATIC

NO.	REVISIONS	DATE
4.	REVISE PER CITY OF PEMBROKE PINES UTILITIES	8/25/95
3.	REVISE PER D.N.R.P.	8/9/95
2.	REVISE PER CITY OF PEMBROKE PINES UTILITIES	8/2/95
1.	REVISE PER CITY OF PEMBROKE PINES UTILITIES	6/27/95
5.	ADD SIDEWALK TO LOCATION SKETCH	9/19/95

LIFT STATION NUMBER THREE

PLAN SECTIONS - DETAILS

N.W. 151h STREET

TOWNGATE LIMITED PARTNERSHIP
MINTO COMMUNITIES (PEMBROKE), INC.

WINNINGHAM & FRADLEY, INC.
ENGINEERS • PLANNERS • SURVEYORS

DESIGNED: C.D.W. DATE: 5-94
DRAWN: K.P.R. DATE: 5-94
CHECKED: DATE:
APPROVED:
PROJECT NUMBER 94552
SHEET #13 OF 15

SEP 14 1995

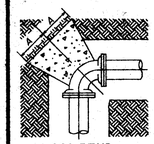

90° BEND

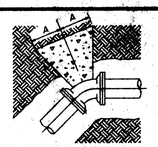

45°-22 1/2°-11 1/4° BEND

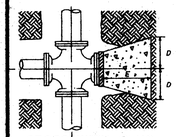

CROSS WITH PLUG

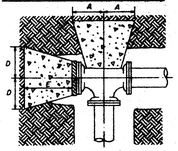

TEE WITH PLUG

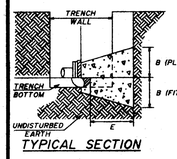

TYPICAL SECTION

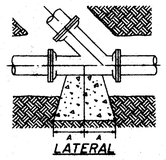

LATERAL

THRUST BLOCK SCHEDULE

PIPE SIZE	HOLD DIMENSIONS		150 P.S.I. TEST PRESSURE								
			90°	45°	22 1/2°	11 1/4°	LAT.	TEE	PLUG		
INCHES	E MIN.	B	A	A	A	A	A	A	C	D	E
4	10"	7"	10"	6"	3"	3"	7"	7"	10"	7"	8"
6	16"	10"	15"	8"	4"	4"	10"	10"	12"	10"	8"
8	20"	14"	18"	10"	5"	5"	14"	14"	14"	14"	12"
10	28"	16"	24"	14"	7"	7"	16"	16"	16"	16"	14"
12	30"	20"	26"	16"	8"	8"	20"	20"	18"	20"	20"

NOTE: ALL PIPES 16" DIA. AND ABOVE SHALL HAVE RESTRAINED JOINTS OR HAVE SUITABLE THRUST RESTRAINT PROVIDED OF A DESIGN APPROVED BY THE CITY OF PEMBROKE PINES.

1. THRUST BLOCKS SHALL BE POURED AGAINST UNDISTURBED MATERIAL, WHERE TRENCH WALL HAS BEEN DISTURBED EXCAVATE ALL LOOSE MATERIAL AND EXTEND THRUST BLOCK TO UNDISTURBED MATERIAL.
2. ON TEES AND BENDS EXTEND THRUST BLOCK THE FULL LENGTH AND PUT WOOD BLOCKING IN FRONT OF ALL PLUGS BEFORE POURING CONCRETE. PROVIDE VISQUEEN LAYER BETWEEN CONCRETE AND FITTINGS.
3. ALL WOOD BLOCKING SHALL BE CREOSOTED 112 LB. EMPTY CELL) PER LATEST REVISION UNITED STATES FEDERAL SPEC. TTW-556.
4. BACKFILL SHALL CONSIST ENTIRELY OF CLEAN SAND AND SMALL ROCK FRAGMENTS. ANY MUCK FOUND AROUND THE EXCAVATION SHALL BE REPLACED WITH COMPACTED ACCEPTABLE MATERIAL.

THRUST BLOCK DETAILS

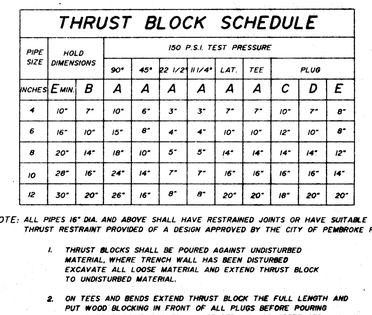

NOTES

1. HYDRANTS GUARDS TO BE 4" DIA. GALV. STEEL PIPE FILLED W/CONCR. PAINT GUARDS TRAFFIC YELLOW, AS REQUIRED BY THE CITY OF PEMBROKE PINES.
2. TIE RODS MAY BE OMITTED WHEN OTHER APPROVED METHODS OF RESTRAINING ARE UTILIZED.
3. ℄ OF THE PUMPER CONNECTION SHALL BE 18" MIN. ABOVE THE ℄ OF THE NEAREST ROADWAY OR FINISH GRADE.
4. MINIMUM FOOT VALVE SIZE IS 1/4" FOR FIRE FLOWS OF 1000 GPM OR GREATER.
5. COAT TIE RODS WITH COLD TAR ENAMEL AFTER ASSEMBLY (2 COATS MIN.)
6. ALL HYDRANTS SHALL BE TRAFFIC BREAKAWAY TYPE OR APPROVED EQUAL.
7. PLACE FIRE HYDRANT VALVE AS CLOSE TO MAIN LINE TEE AS POSSIBLE.

FIRE HYDRANT DETAILS

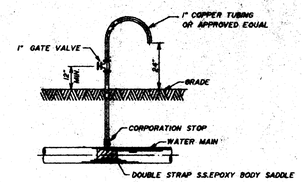

NOTES

1. SAMPLING POINTS SHALL BE LOCATED AND LATER REMOVED AS REQUIRED BY BROWARD PUBLIC HEALTH UNIT.
2. CONTRACTOR TO CONFIRM LOCATION WITH CITY OF PEMBROKE PINES PRIOR TO INSTALLATION.

BACTERIOLOGICAL SAMPLING POINT DETAIL

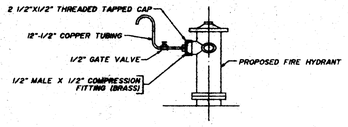

NOTES:

1. SAMPLE POINTS SHALL BE SET-UP AND LATER REMOVED AS REQUIRED BY THE BROWARD PUBLIC HEALTH UNIT.
2. CONTRACTOR SHALL CONFIRM LOCATION WITH THE ENGINEER OF RECORD PRIOR TO INSTALLATION.
3. SAMPLING FROM FIRE HYDRANTS SHALL BE USED ONLY WHEN DIRECTED BY THE BROWARD COUNTY PUBLIC HEALTH UNIT.

FIRE HYDRANT BACTERIOLOGICAL SAMPLING POINT

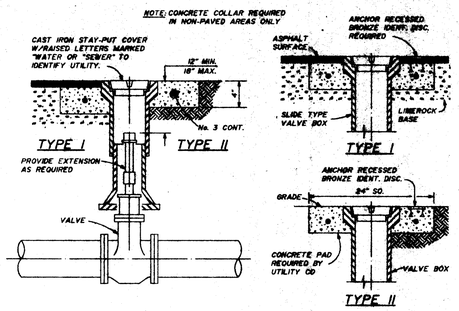

VALVE AND BOX DETAILS

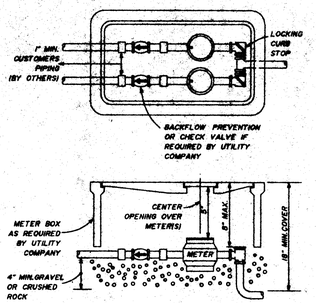

METER BOX DETAIL

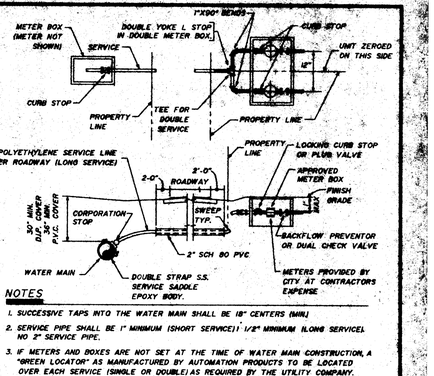

NOTES

1. SUCCESSIVE TAPS INTO THE WATER MAIN SHALL BE 18" CENTERS (MIN.)
2. SERVICE PIPE SHALL BE 1" MINIMUM (SHORT SERVICE) 1 1/2" MINIMUM (LONG SERVICE). NO 2" SERVICE PIPE.
3. IF METERS AND BOXES ARE NOT SET AT THE TIME OF WATER MAIN CONSTRUCTION, A "GREEN LOCATOR" AS MANUFACTURED BY AUTOMATION PRODUCTS TO BE LOCATED OVER EACH SERVICE (SINGLE OR DOUBLE) AS REQUIRED BY THE UTILITY COMPANY.
4. SHORT SERVICES REQUIRE 18" MIN. COVER, LONG SHALL BE 24" COVER MIN. (ROADWAYS).
5. CONTRACTOR'S RESPONSIBILITY TO SET METER BOX.
6. METER BOXES TO BE SET IN GRASSY AREAS UNLESS OTHERWISE DIRECTED BY THE CITY.

WATER SERVICE DETAILS

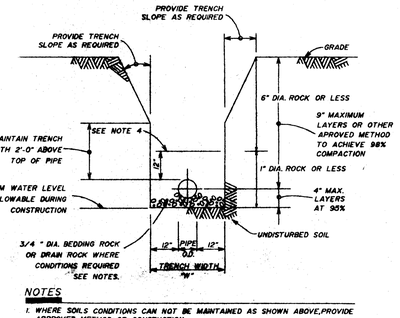

NOTES

1. WHERE SOILS CONDITIONS CAN NOT BE MAINTAINED AS SHOWN ABOVE, PROVIDE APPROVED METHOD OF CONSTUCTION.
2. SHEETING WILL BE REQUIRED AS DETERMINED IN THE FIELD.
3. COMPACTION PERCENTAGES SHOWN REFER TO AASHTO T-180.
4. MECHANICAL COMPACTION NOT ALLOWED BELOW THIS LEVEL.
5. PVC PIPE TO HAVE ROCK BACKFILL TO 12" ABOVE PIPE.
6. HAUNCHING AND INITIAL BACKFILL SHALL HAVE NO MATERIAL GREATER 1" DIAMETER.

(UNPAVED AREAS)

TRENCH DETAIL

(FILLING AND FLUSHING)

CONNECTION DETAIL

NOTES

1. REMOVE TEMPORARY CONNECTION AT SADDLE ON NEW MAIN AFTER FILLING AND FLUSHING HAS BEEN COMPLETED. SADDLE PLUGGED VIA BRASS PLUG.
2. DO NOT REMOVE TEMPORARY CONNECTION AT CORPORATION STOP ON NEW MAIN UNTIL ALL TESTING HAS BEEN COMPLETED.
3. COMPLY WITH ALL BROWARD COUNTY HEALTH DEPT. REGULATIONS.
4. PROVIDE ALL NECESSARY THRUST BLOCKS OR OTHER RESTRAINTS.

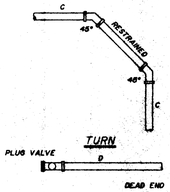

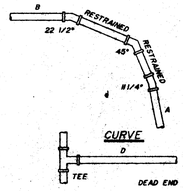

PIPE SIZE/ DISTANCE	6"	8"	10"	12"	14"	16"	18"	20"	24"	30"	36"	42"	48"	54"
A	MINIMUM 18"													
B	MINIMUM 18"									36"	36"	36"	36"	36"
C	18"	36"	36"	54"	54"	54"	54"	72"	72"	108"	108"	108"	126"	126"
D	78"	90"	108"	126"	144"	162"	180"	198"	216"	270"	324"	380"	396"	398"

RESTRAINED JOINT DETAIL

FIRE DEPARTMENT NOTES:

THE PEMBROKE PINES FIRE DEPARTMENT IS REQUESTING THAT ALL UTILITY CONTRACTORS FOLLOW THESE STANDARDS DURING THE INSTALLATION AND FOR ACCEPTANCE OF THE SYSTEM BEING INSTALLED.

1. ALL FIRE HYDRANTS TO BE INSTALLED WITHIN TEN (10') TO FIFTEEN FEET (15') FROM THE OUTSIDE CURB LINE OR EDGE OF PAVEMENT.
2. ALL STEAMER (4 1/2") CONNECTIONS SHALL FACE THE ROADWAY, AND NOT THE PARKING SPACES.
3. ALL FIRE HYDRANTS SHALL BE ERECTED SO AS TO HAVE THE CENTER OF THE STEAMER CONNECTION A MINIMUM OF 18" ABOVE THE CROWN OF THE NEAREST ROADWAY OR 18" ABOVE THE SURROUNDING GROUND.
4. VISIBILITY AND ACCESS TO THE FIRE HYDRANTS: NO FIRE HYDRANT(S) SHALL BE SUBSTANTIALLY OBSCURE FROM THE ADJACENT ROADWAY OR ACCESS WAY BY PLANTINGS, WALLS, OR OTHER VISUAL SCREENING WITHIN SEVEN AND FIVE FEET (7.5') OF THE REAR AND SIDES AND NO OBSTRUCTIONS IN FRONT OF THE FIRE HYDRANT(S).
5. ONE OR MORE BLUE DOUBLE REFLECTIVE D.O.T. TYPE ROAD MARKERS ARE TO BE ADHERED TO THE HARD SURFACE ROADWAY IN THE MIDDLE OF THE LANE NEAREST TO AND DIRECTLY IN FRONT OF THE NEWLY INSTALLED FIRE HYDRANT (TWO (2) REFLECTORS ON CORNER HYDRANTS AND FOR EACH ROADWAY).
6. ALL FIRE HYDRANTS TO BE PAINTED YELLOW (RUST-OLEUM 944 SAFETY YELLOW OR APPROVED EQUAL).
7. ALL FIRE HYDRANTS THAT ARE NOT IN SERVICE (NOT ABLE TO FLOW WATER) SHALL BE COVERED WITH A PLASTIC BAG AND THE BAG SECURED TO THE HYDRANT WITH TAPE.

WATER DISTRIBUTION SYSTEM NOTES

1. ALL WATER MAINS SHALL BE CONSTRUCTED WITH A MINIMUM OF 30" COVER FOR DUCTILE IRON PIPE AND A MINIMUM OF 36" FOR P.V.C. PIPE.
2. AFTER THE PIPE HAS BEEN ADEQUATELY BACKFILLED AND SUPPORTED, IT SHALL BE SUBJECTED TO A HYDROSTATIC MINIMUM PRESSURE OF 150 p.s.i. OR 1.5 TIMES THE SYSTEM WORKING PRESSURE, WHICHEVER IS GREATER.
3. THE DURATION OF THE PRESSURE TEST SHALL BE NOT LESS THAN TWO HOURS.
4. AFTER THE MAIN HAS BEEN BROUGHT TO TEST PRESSURE, IT SHALL BE HELD AT THIS PRESSURE AND MAKE-UP WATER SHALL BE CAREFULLY MEASURED BY PUMPING WATER FROM A VESSEL OF KNOWN VOLUME. THE LEAKAGE TEST SHALL BE CONDUCTED IN ACCORDANCE WITH AWWA C 600-93. LEAKAGE SHALL BE LESS THAN THE NUMBER OF GALLONS PER HOUR AS DETERMINED BY THE FOLLOWING FORMULA:

$$QT = (SID(\sqrt{P}))/133200$$

WHERE QT = TOTAL ALLOWABLE LEAKAGE, IN GALLONS PER HOUR, FOR THE PIPE IN GALLONS PER HOUR, S IS THE PIPE LENGTH IN FEET, D IS THE PIPE DIAMETER IN INCHES, P IS THE AVERAGE TEST PRESSURE IN P.S.I.

5. UPON COMPLETION OF THE LEAKAGE TEST, THE MAINS SHALL BE DISINFECTED IN ACCORDANCE WITH AWWA C 651-92.
6. WATER MAIN WILL NOT BE ACTIVATED UNTIL THE B.C.P.H.U. HAS ISSUED THEIR CLEARANCE LETTER.

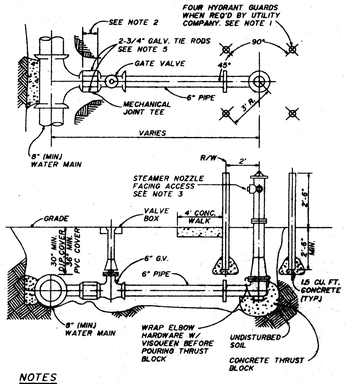

NOTES

1. HYDRANTS GUARDS TO BE 4" DIA. GALV. STEEL PIPE FILLED W/CONCR. PAINT GUARDS TRAFFIC YELLOW, AS REQUIRED BY THE CITY OF PEMBROKE PINES.
2. TIE RODS MAY BE OMITTED WHEN OTHER APPROVED METHODS OF RESTRAINING ARE UTILIZED.
3. ℄ OF THE PUMPER CONNECTION SHALL BE 18" MIN. ABOVE THE ℄ OF THE NEAREST ROADWAY OR FINISH GRADE.
4. MINIMUM FOOT VALVE SIZE IS 1/4" FOR FIRE FLOWS OF 1000 GPM OR GREATER.
5. COAT TIE RODS WITH COLD TAR ENAMEL AFTER ASSEMBLY (2 COATS MIN.)
6. ALL HYDRANTS SHALL BE TRAFFIC BREAKAWAY TYPE OR APPROVED EQUAL.
7. PLACE FIRE HYDRANT VALVE AS CLOSE TO MAIN LINE TEE AS POSSIBLE.

FIRE HYDRANT DETAILS

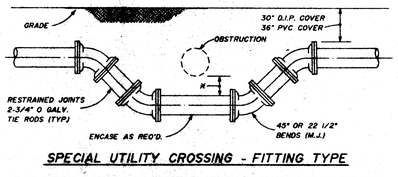

SPECIAL UTILITY CROSSING - FITTING TYPE

* 18" MIN. CLEARANCE REQUIRED FOR WATER AND SEWER MAIN CROSSIONS. 12" MIN. CLEARANCE REQUIRED FOR OTHER TYPE UTILITIES CROSSING.

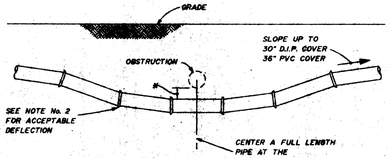

STANDARD UTILITY CROSSING - DEFLECTION TYPE

NOTES

1. THE DEFLECTION TYPE CROSSING SHALL BE USED WHEREVER POSSIBLE. ONLY UNDER SPECIFIC ORDERS BY THE ENGINEER SHALL THE FITTING TYPE CROSSING BE ALLOWED.
2. CONSTRUCT STANDARD CROSSING USING 75% OF MANUFACTURERS MAXIMUM JOINT DEFLECTION (MAX.).
3. COAT THE RODS WITH A COAL TAR ENAMEL AFTER ASSEMBLY. (2 COATS MIN.).
4. TIE RODS MAY BE OMITTED WHEN OTHER APPROVED METHODS OF RESTRAINING ARE UTILIZED.

UTILITY CROSSING DETAILS

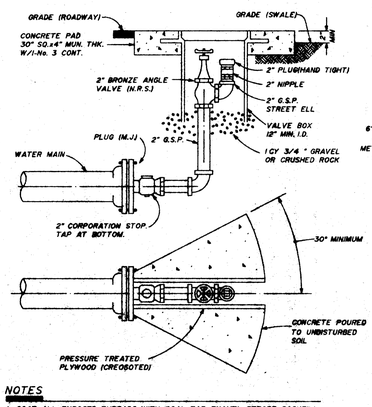

NOTES

1. COAT ALL EXPOSED THREADS WITH COAL TAR ENAMEL BEFORE BACKFILL.
2. THRUST BLOCK HEIGHT EQUAL TO PIPE DIAMETER.
3. BLOW-OFF TO BE LOCATED IN SWALE WHERE POSSIBLE.

2" BLOW-OFF DETAIL

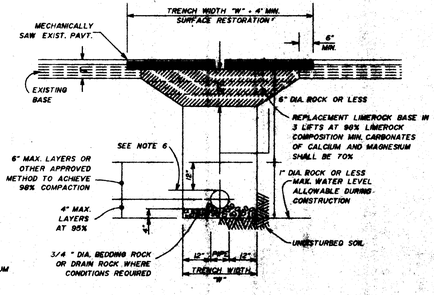

NOTES

1. WHERE SOILS CONDITIONS CAN NOT BE MAINTAINED, AS SHOWN ABOVE, PROVIDE APPROVED METHOD OF CONSTUCTION.
2. SHEETING WILL BE REQUIRED AS DETERMINED IN THE FIELD.
3. NEW SURFACING MATERIALS SHALL BE CONSISTENT WITH EXISTING AND SHALL HAVE BUTT JOINTS (3" MIN. THK.)
4. COMPACTION PERCENTAGES SHOWN, REFER TO AASHTO T-180.
5. ALL ROADWAY RESTORATION SHALL COMPLY WITH THE RESPECTIVE GOVERNING AUTHORITY.
6. MECHANICAL COMPACTION NOT ALLOWED BELOW THIS LEVEL.
7. DENSITY TESTS: MIN. 2 PER SUB-BASE, MIN. 2 PER LIMEROCK, PER CUT. CITY ENGINEERING DEPT. RECEIVES 2 COPIES OF RESULTS.
8. COMPACTION SHALL BE THE VIBRATORY EQUIPMENT METHOD.

(PAVED AREAS)

TRENCH DETAIL

1. A WATER MAIN SHOULD CROSS OVER PIPES WHEREEVER POSSIBLE MAINTAINING A 36" COVER FOR P.V.C. 30" COVER FOR D.I.P. AND 18" SEPARATION AS MINIMUMS.
2. WHEREVER A WATER MAIN CROSSES UNDER A SEWER MAIN OR CROSSES OVER WITH LESS THAN 18" VERTICAL SEPARATION, THEN D.I.P. SHALL BE USED FOR BOTH PIPES FOR A DISTANCE OF 20' CENTERED ON CROSSING WITH NO JOINTS WITHIN 10' OF THE CROSSING.
3. 18" SEPARATION SHOULD BE MAINTAINED BETWEEN ALL PIPES (STORM, SEWER, WATER) WHEREVER POSSIBLE. 12" IS THE ABSOLUTE MINIMUM SEPARATION WITH D.I.P. REQUIRED FOR ANY SEPARATION LESS THAN 18" INCHES.
4. MAINTAIN 10' HORIZONTAL SEPARATION BETWEEN WATER AND SEWER AS A MINIMUM
5. FORCE MAIN CROSSING WATER MAIN SHALL BE LAID TO PROVIDE A MIN. VERTICAL SEPARATION OF 18" BETWEEN THE PIPES WITH WATER MAIN CROSSING OVER FORCE MAIN.
6. 3' HORIZONTAL CLEARENCE SHALL BE PROVIDED BETWEEN UTILITIES AND OBSTRUCTIONS (CATCH BASINS, CONCRETE POLES, ETC.)
7. 5' HORIZONTAL CLEARENCE SHALL BE PROVIDED BETWEEN UTILITIES AND TREES.

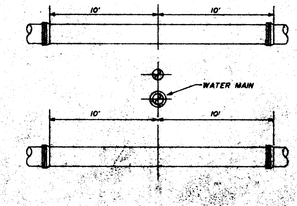

WATERMAIN CROSSING STANDARD DETAIL

THESE DETAILS ARE APPROVED BY THE CITY OF PEMBROKE PINES UTILITIES DEPARTMENT.

WATER MAIN
DETAILS
NW. 15th. STREET
TOWNGATE LIMITED PARTNERSHIP
MINTO COMMUNITIES (PEMBROKE), INC.

WINNINGHAM & FRADLEY, INC.
ENGINEERS + PLANNERS + SURVEYORS

NO.	REVISIONS	DATE	DESIGNED	N/A	DATE:	12/94	APPROVED
1.	REVISE PER CITY OF P.P.U.	6-27-95	DRAWN	W.G.F.	DATE:	12/94	
			CHECKED		DATE:		PROJECT NUMBER 94562

SHT. 13 OF 15

SEP 13 1995

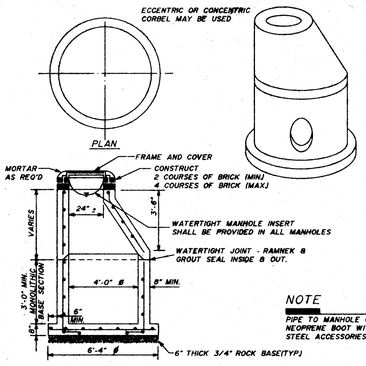

NOTE

PIPE TO MANHOLE CONNECTION TO BE NEOPRENE BOOT WITH STAINLESS STEEL ACCESSORIES.

TO BE USED WITH DEPTH OF COVER MORE THAN 6'-0" SPECIAL DESIGN CONSIDERATION SHOULD BE GIVEN WHEN DEPTH COVER EXCEEDS 12'-0" INSIDE OF MANHOLE SHOULD BE COATED WITH TWO COATS OF KOPPERS BITUMASTIC No.300M AND ONE COAT OUTSIDE.

*USE 12" WHEN DEPTH OF COVER IS MORE THAN 12'-0"

(TWO PIECE CONSTRUCTION)

4'-0" I.D. STANDARD MANHOLE

(ECCENTRIC CORBEL SHALL BE USED WHEN DEPTH OF COVER EXCEEDS 6'-0" USE CONCENTRIC CORBEL OTHERWISE)

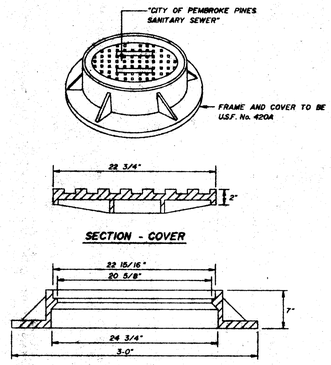

FRAME AND COVER DETAIL

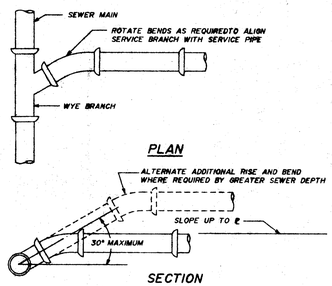

NOTES:

1. MODIFIED RISER LATERAL SHALL BE USED WHEN DEPTH OF COVER EXCEEDS 7'-0".

STANDARD LATERAL DETAIL

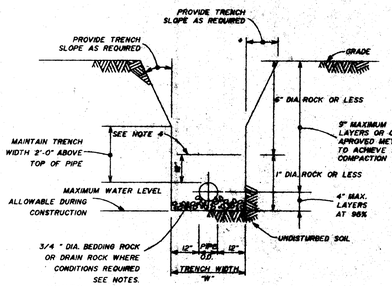

NOTES

1. WHERE SOIL CONDITIONS CAN NOT BE MAINTAINED AS SHOWN ABOVE, PROVIDE APPROVED METHOD OF CONSTUCTION.
2. SHEETING WILL BE REQUIRED AS DETERMINED IN THE FIELD.
3. COMPACTION PERCENTAGES SHOWN REFER TO A.A.S.H.T.O. T-180.
4. MECHANICAL COMPACTION NOT ALLOWED BELOW THIS LEVEL.
5. P.V.C. PIPE TO HAVE ROCK BACKFILL TO 12" ABOVE PIPE.
6. HAUNCHING AND INITIAL BACKFILL SHALL HAVE NO MATERIAL GREATER THAN 1" DIAMETER.

(UNPAVED AREAS)

TRENCH DETAIL

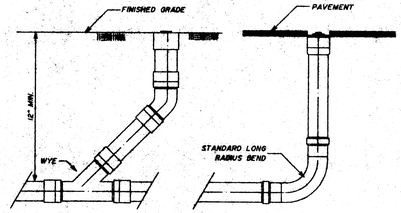

CLEAN-OUT DETAIL

NOTES ON WATER-SEWER SEPARATION

1. SANITARY SEWERS AND FORCE MAINS SHOULD CROSS UNDER WATER MAINS WHENEVER POSSIBLE.SANITARY SEWERS AND FORCE MAINS CROSSING WATER MAINS SHALL BE LAID TO PROVIDE A MINIMUM VERTICAL DISTANCE OF 18 INCHES BETWEEN THE INVERT OF THE UPPER PIPE AND THE CROWN OF THE LOWER PIPE WHENEVER POSSIBLE.

   WHERE SANITARY SEWERS FORCE MAINS MUST CROSS A WATER MAIN WITH LESS THAN 18 INCHES VERTICAL DISTANCE,BOTH THE SEWER AND THE WATER MAIN SHALL BE CONSTRUCTED OF DUCTILE IRON PIPE (DIP) AT THE CROSSING.SUFFICIENT LENGTHS OF DIP MUST BE USED TO PROVIDE A MINIMUM SEPARATION OF 9 FEET BETWEEN ANY TWO JOINTS. ALL JOINTS ON THE WATER MAIN WITHIN 20 FEET OF THE CROSSING MUST BE MECHANICALLY RESTRAINED. A MINIMUM VERTICAL CLEARANCE OF 12 INCHES MUST BE MAINTAINED AT ALL CROSSINGS.

   ALL CROSSINGS SHALL BE ARRANGED SO THAT THE SEWER PIPE JOINTS AND THE WATER PIPE JOINTS ARE EQUIDISTANT FROM THE POINT OF CROSSING (PIPES CENTERED ON THE CROSSING).

   WHERE A NEW PIPE CONFLICTS WITH AN EXISTING PIPE WITH LESS THAN 18 INCHES VERTICAL CLEARANCE,THE NEW PIPE SHALL BE ARRANGED TO MEET THE CROSSING REQUIREMENTS ABOVE.

2. A MINIMUM 10-FOOT HORIZONTAL SEPARATION SHALL BE MAINTAINED BETWEEN ANY TYPE OF SEWER AND WATER MAIN IN PARALLEL INSTALLATIONS WHENEVER POSSIBLE.

   IN CASES WHERE IT IS NOT POSSIBLE TO MAINTAIN A 10 FOOT HORIZONTAL SEPARATION,THE WATER MAIN MUST BE LAID IN SEPARATE TRENCH OR ON AN UNDISTURBED EARTH SHELF LOCATED ON ONE SIDE OF THE SEWER OR FORCE MAIN AT SUCH AN ELEVATION THAT THE BOTTOM OF THE WATER MAIN IS AT LEAST 18 INCHES ABOVE THE TOP OF THE SEWER.

   WHERE IT IS NOT POSSIBLE TO MAINTAIN A VERTICAL DISTANCE OF 18 INCHES IN PARALLEL INSTALLATIONS,THE WATER MAIN SHALL BE CONSTRUCTED OF DIP AND THE SANITARY SEWER OR THE FORCE MAIN SHALL BE CONSTRUCTED OF DIP WITH A MINIMUM VERTICAL DISTANCE OF 12 INCHES.THE WATER MAIN SHOULD ALWAYS BE ABOVE THE SEWER. JOINTS ON THE WATER MAIN SHALL BE LOCATED AS FAR APART AS POSSIBLE FROM JOINTS ON THE SEWER OR FORCE MAIN (STAGGERED JOINTS).

3. ALL DIP SHALL BE CLASS 350 OR HIGHER. ADEQUATE PROTECTIVE MEASURES AGAINST CORROSION SHALL BE USED AS DETERMINED BY THE DESIGN.

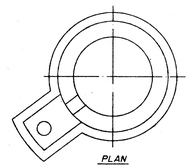

NOTE

PIPE TO MANHOLE CONNECTION TO BE NEOPRENE BOOT WITH STAINLESS STEEL ACCESSORIES.

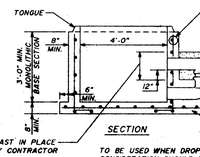

TO BE USED WHEN DROP IS 2' OR MORE. SPECIAL DESIGN CONSIDERATION SHOULD BE GIVEN WHEN DEPTH OF COVER EXCEEDS 12'-0" AND/OR THE SIZE AND NUMBER OF PIPES ENTERING THE MANHOLE RESULTS IN UNUSUAL CONDITIONS. INSIDE THE MANHOLE SHALL BE COATED WITH TWO COATS OF KOPPERS BITUMASTIC 300M O.E. AND ONE COAT OUTSIDE.

* USE 12" WHEN DEPTH OF COVER IS MORE THAN 12'-0".

TYPE "A" DROP MANHOLE

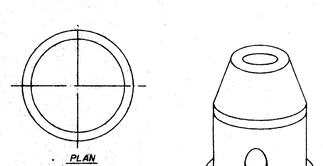

NOTE

PIPE TO MANHOLE CONNECTION TO BE NEOPRENE BOOT WITH STAINLESS STEEL ACCESSORIES.

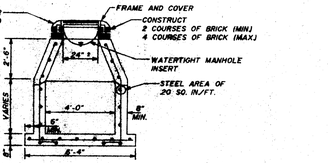

TO BE USED WITH DEPTH OF COVER LESS THAN 6'-0". INSIDE OF MANHOLE SHALL BE COATED WITH TWO COATS OF KOPPERS BITUMASTIC No.300M AND ONE COAT OUTSIDE.

(TWO PIECE CONSTRUCTION)

4'-0" I.D. STANDARD MANHOLE

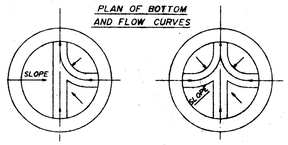

NOTES

1. PROVIDE SPILLWAY FOR SMOOTH FLOW BETWEEN PIPES WITH DIFFERENT INVERT ELEVATIONS.
2. INVERT CHANNELS TO BE CONSTRUCTED FOR SMOOTH FLOW WITH NO OBSTRUCTIONS.
3. NORTH-SOUTH CHANNEL TO BE FORMED IN ALL MANHOLES TO ACCEPT T.V. CAMARA.
4. WHEN DIRECTIONAL CHANGES EXCEEDING 45° OCCUR, AN EXTRA FLOW LINE ELEVATION DROP OF 10.05 FEET) ACROSS MANHOLE WILL BE PROVIDED.

FLOW CHANNEL DETAILS

NOTES

1. WHERE SOIL CONDITIONS CAN NOT BE MAINTAINED AS SHOWN ABOVE, PROVIDE APPROVED METHOD OF CONSTUCTION.
2. SHEETING WILL BE REQUIRED AS DETERMINED IN THE FIELD.
3. NEW SURFACING MATERIALS SHALL BE CONSISTENT WITH EXISTING AND SHALL HAVE BUTT JOINTS (2" MIN.THK.)
4. COMPACTION PERCENTAGES SHOWN REFER TO A.A.S.H.T.O. T-180.
5. ALL ROADWAY RESTORATION SHALL COMPLY WITH THE RESPECTIVE GOVERNING AUTHORITY.
6. MECHANICAL COMPACTION NOT ALLOWED BELOW THIS LEVEL.
7. DENSITY TESTS: MIN. 2 PER SUB-BASE, MIN. 2 PER LIMEROCK, PER CUT. CITY ENGINEERING DEPT. RECEIVES 2 COPIES OF RESULTS.
8. FLORIDA TESTING & ENGINEER CO. IS THE AUTHORIZED CITY TESTING LABORATORY.
9. COMPACTION SHALL BE THE VIBRATORY EQUIPMENT METHOD.

(PAVED AREAS)

TRENCH DETAIL

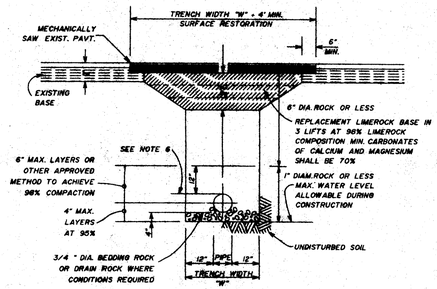

NOTES

1. WHERE SOIL CONDITIONS CAN NOT BE MAINTAINED AS SHOWN ABOVE, PROVIDE APPROVED METHOD OF CONSTUCTION.
2. SHEETING WILL BE REQUIRED AS DETERMINED IN THE FIELD.
3. NEW SURFACING MATERIALS SHALL BE CONSISTENT WITH EXISTING AND SHALL HAVE BUTT JOINTS (2" MIN.THK.)
4. COMPACTION PERCENTAGES SHOWN REFER TO A.A.S.H.T.O. T-180.
5. ALL ROADWAY RESTORATION SHALL COMPLY WITH THE RESPECTIVE GOVERNING AUTHORITY.
6. MECHANICAL COMPACTION NOT ALLOWED BELOW THIS LEVEL.
7. DENSITY TESTS: MIN. 2 PER SUB-BASE, MIN. 2 PER LIMEROCK, PER CUT. CITY ENGINEERING DEPT. RECEIVES 2 COPIES OF RESULTS.
8. FLORIDA TESTING & ENGINEER CO. IS THE AUTHORIZED CITY TESTING LABORATORY.
9. COMPACTION SHALL BE THE VIBRATORY EQUIPMENT METHOD.

(PAVED AREAS)

TRENCH DETAIL

NOTES

1. SINGLE FAMILY RESIDENTIAL SERVICE LATERAL SHALL BE 6" (SINGLE OR DOUBLE) WITH 4" CONNECTIONS. (THIS INCLUDES MULTIPLE UNITS INDIVIDUALLY CONNECTED.)
2. MINIMUM SLOPES: 6" LATERAL - 1/4" PER FOOT
   6" LATERAL - 1/8" PER FOOT

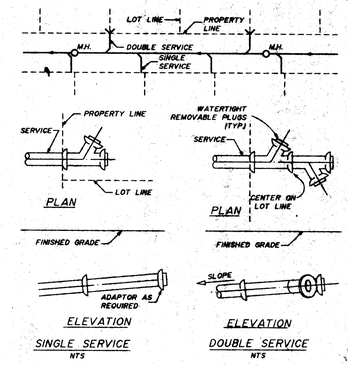

LATERAL CONNECTION DETAIL

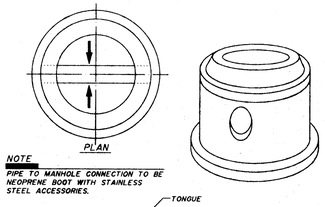

INSIDE OF MANHOLE SHALL BE COATED WITH TWO COATS OF KOPPERS BITUMASTIC No.300M AND ONE COAT OUTSIDE.

TYPE "B" DROP MANHOLE

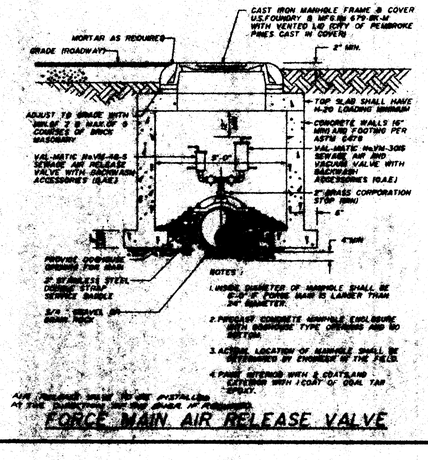

ALL PIPING AND VALVES SHALL BE PROVIDED AT SAME ELEVATION AS FORCE MAIN, IF POSSIBLE.

FORCE MAIN AIR RELEASE VALVE

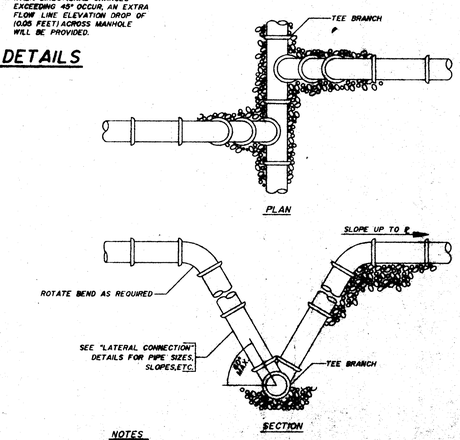

NOTES

1. MODIFIED RISER CONNECTION TO BE USED WHEN DEPTH OF COVER EXCEEDS 7'-0"
2. PROVIDE 4" MINIMUM DEPTH OF GRAVEL OR CRUSHED ROCK FOR BEDDING.

MODIFIED RISER LATERAL DETAIL

SEWAGE COLLECTION SYSTEM NOTES:

1. SEWER PIPES SHALL BE LAID AT LEAST 10' HORIZONTALLY FROM ANY WATER MAINS.
2. A VERTICAL DISTANCE OF AT LEAST 18" SHOULD BE MAINTAINED WHEN A SEWER PIPE CROSSES UNDER A WATER MAIN. IF THIS IS NOT POSSIBLE, THEN BOTH PIPES MUST BE DIP.
3. IT IS STRONGLY RECOMMENDED THAT WATER MAINS NOT CROSS UNDER SEWER PIPES. HOWEVER, IF THIS SITUATION IS UNAVOIDABLE, THEN THE ABOVE MENTIONED PRECAUTIONS SHALL BE OBSERVED REGARDLESS OF THE VERTICAL SEPARATION BETWEEN SEWER PIPES AND WATER MAINS. BOTH SHALL BE DIP.

THESE DETAILS ARE APPROVED BY THE CITY OF PEMBROKE PINES UTILITY DEPARTMENT

SEWAGE COLLECTION SYSTEM

DETAILS

TOWNGATE - N.W. 15th. STREET

MINTO COMMUNITIES (PEMBROKE), INC.

WINNINGHAM & FRADLEY, INC.
ENGINEERS - PLANNERS - SURVEYORS

NO.	REVISIONS	DATE	CHECKED:	DATE:	DESIGNED: N/A	DATE: 11/94	APPROVED:
1	ADD AIR RELEASE VALVE PER DWRP	8/9/95	DRAWN: WBF	DATE: 11/94			

PROJECT NUMBER: 94552 SHEET NO. 15 OF 15

SEP 18 1995

PAVEMENT MARKINGS NOTES:

1. PROVIDE AND INSTALL ALL NECESSARY PAVEMENT MARKINGS AND SIGNS IN ACCORDANCE WITH THE MANUAL ON UNIFORM TRAFFIC CONTROL DEVICES (MUTCD,1988 EDITION) AND THE F.D.O.T. "ROADWAY AND TRAFFIC DESIGN STANDARDS" (1990 EDITION) AND THE CITY OF PEMBROKE PINES. ALL TRAFFIC SIGNS SHALL BE FULLY REFLECTORIZED. ALL MATERIAL, INSTALLATION, AND LOCATIONS SHALL BE SUBJECT TO REVIEW.
2. ALL PAVEMENT MARKINGS SHALL BE THERMOPLASTIC WITH REFLECTIVE RAISED PAVEMEMT MARKERS APPLIED WITH EPOXY.
3. FOR PAVEMENT MARKING DETAILS REFER TO BROWARD COUNTY TRAFFIC ENGINEERING PAVEMENT MARKINGS DETAIL SHEET (LATEST REVISION).
4. REFLECTIVE TAPE TO BE INSTALLED WHERE SHOWN IF REMAINDER OF N.W. 12th STREET IS NOT CONSTRUCTED WHEN N.W. 12th STREET IS CONSTRUCTED TO THE NORTH EAST, TAPE SHALL BE REMOVED.

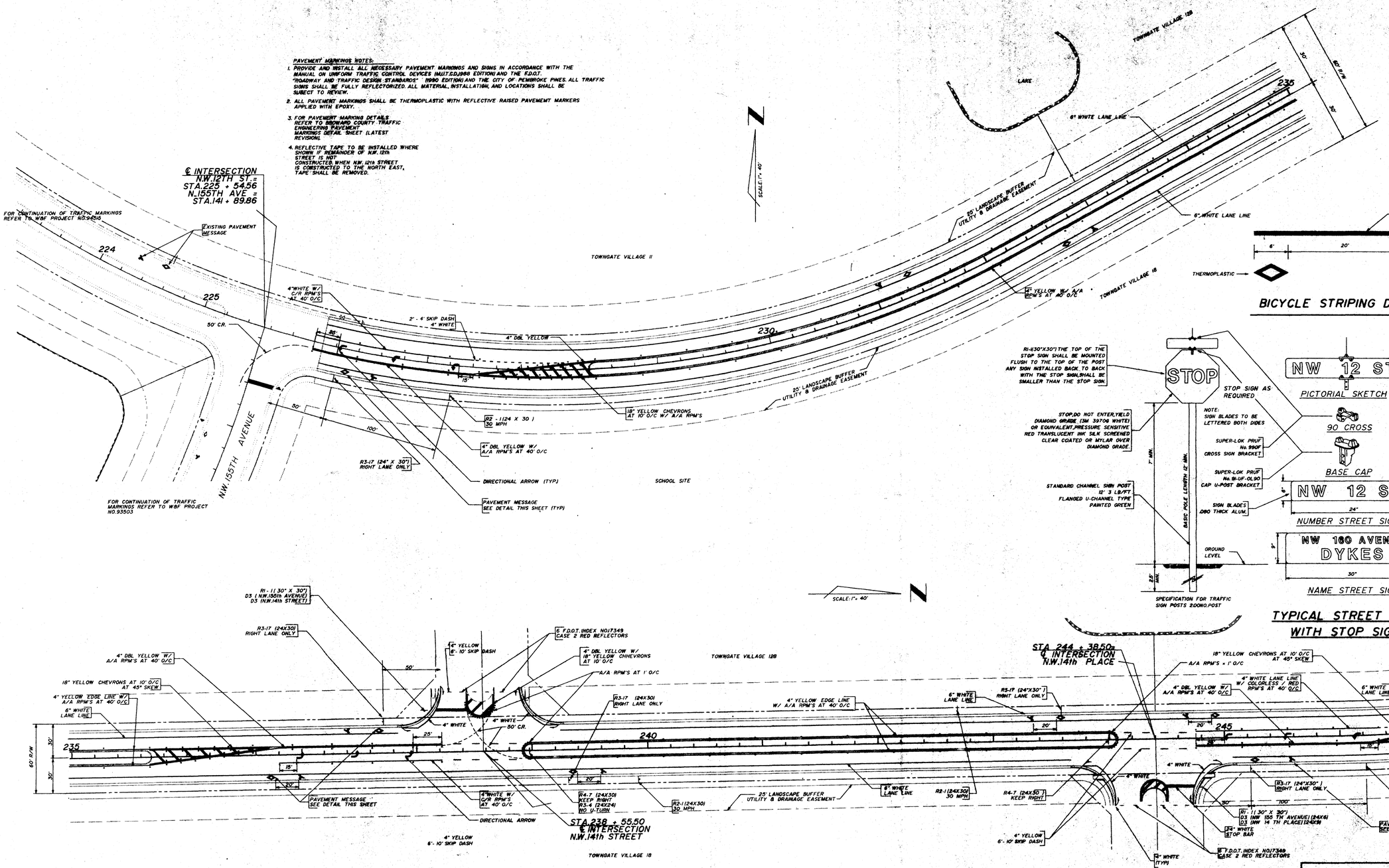

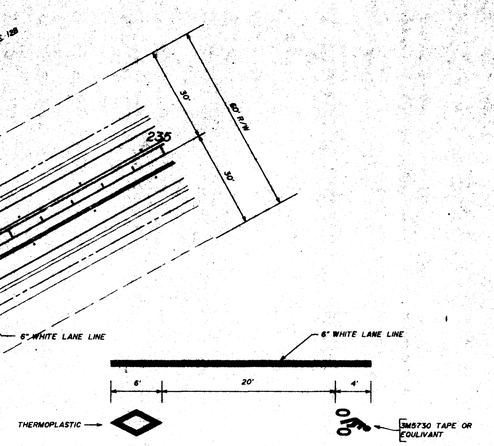

BICYCLE STRIPING DETAIL

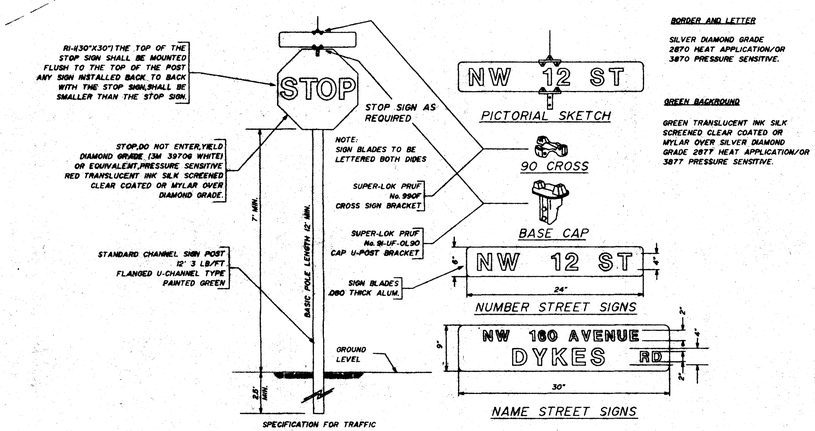

TYPICAL STREET SIGN WITH STOP SIGN

TRAFFIC MARKINGS
PLAN - DETAILS
N.W.15th STREET
MINTO COMMUNITIES

WINNINGHAM & FRADLEY, INC.
ENGINEERS - PLANNERS - SURVEYORS

NO.	REVISIONS	DATE	DESIGNED: GSB	DATE: 7/1994	APPROVED:
1.	REVISED PER BCTED.	6/20/95	DRAWN: N.A.M.	DATE: 7/1994	
			CHECKED:	DATE:	PROJECT NUMBER 94552

SHEET 7 OF 3

SEP 13 1995

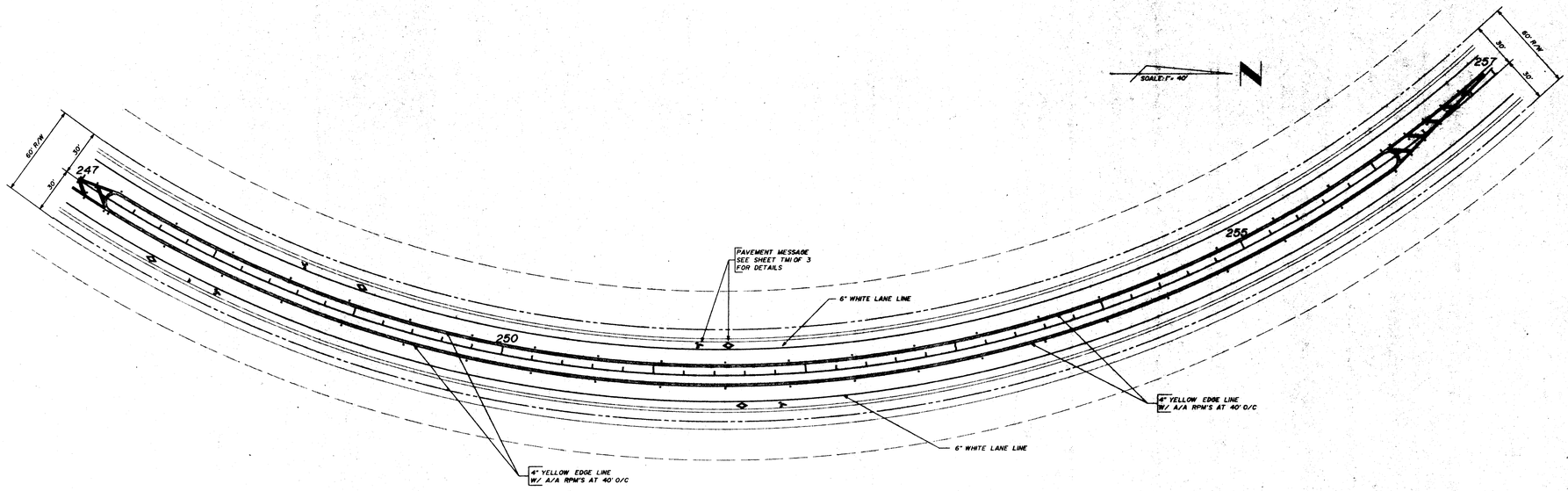

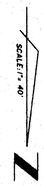

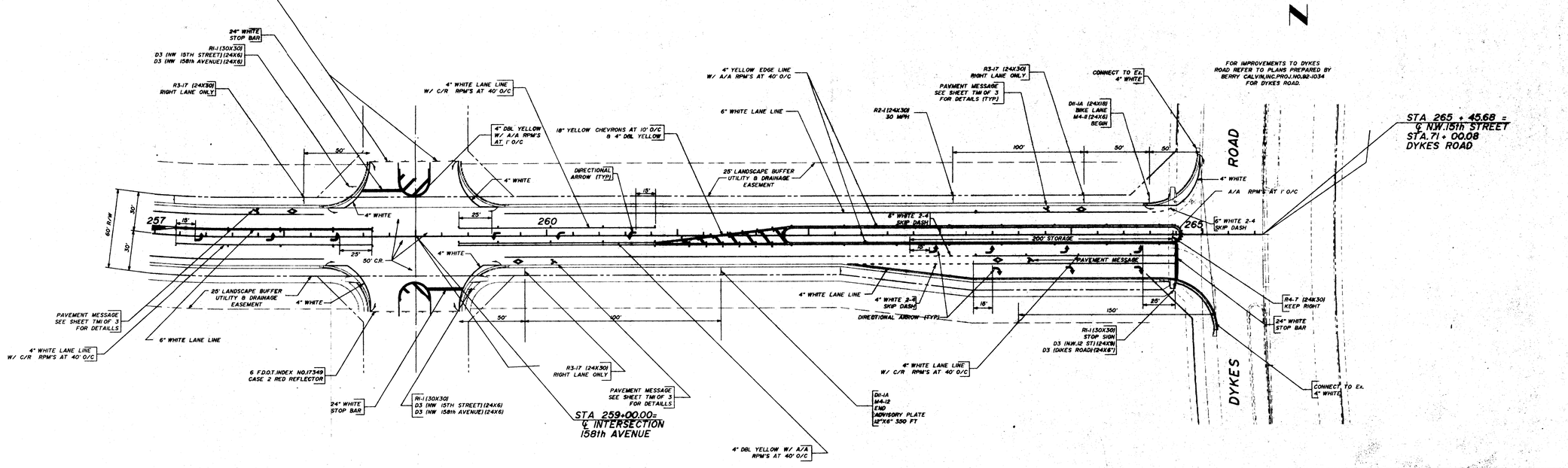

TRAFFIC MARKINGS
PLAN

N.W. 15th STREET
MINTO COMMUNITIES

WINNINGHAM & FRADLEY, INC.
ENGINEERS - PLANNERS - SURVEYORS

NO.	REVISIONS	DATE				
2.	REVISED PER B.C.E.D. COMMENTS	8/2/95	DESIGNED:	GSB	DATE: 11/1994	APPROVED:
1.	REVISED PER B.C.T.E.D. COMMENTS	6/22/95	DRAWN:	N.A.M.	DATE: 12/1994	
			CHECKED:		DATE:	PROJECT NUMBER 94582 SHEET TM2 OF 2

SEP 13 1995

FOR DROP LANE:

V_y	Recommended min.	Preferred
40-45m.p.h.	800'	800'
30-35m.p.h.	400'	600'

RIGHT LANE MUST TURN RIGHT placed at each ONLY message (R3-7).

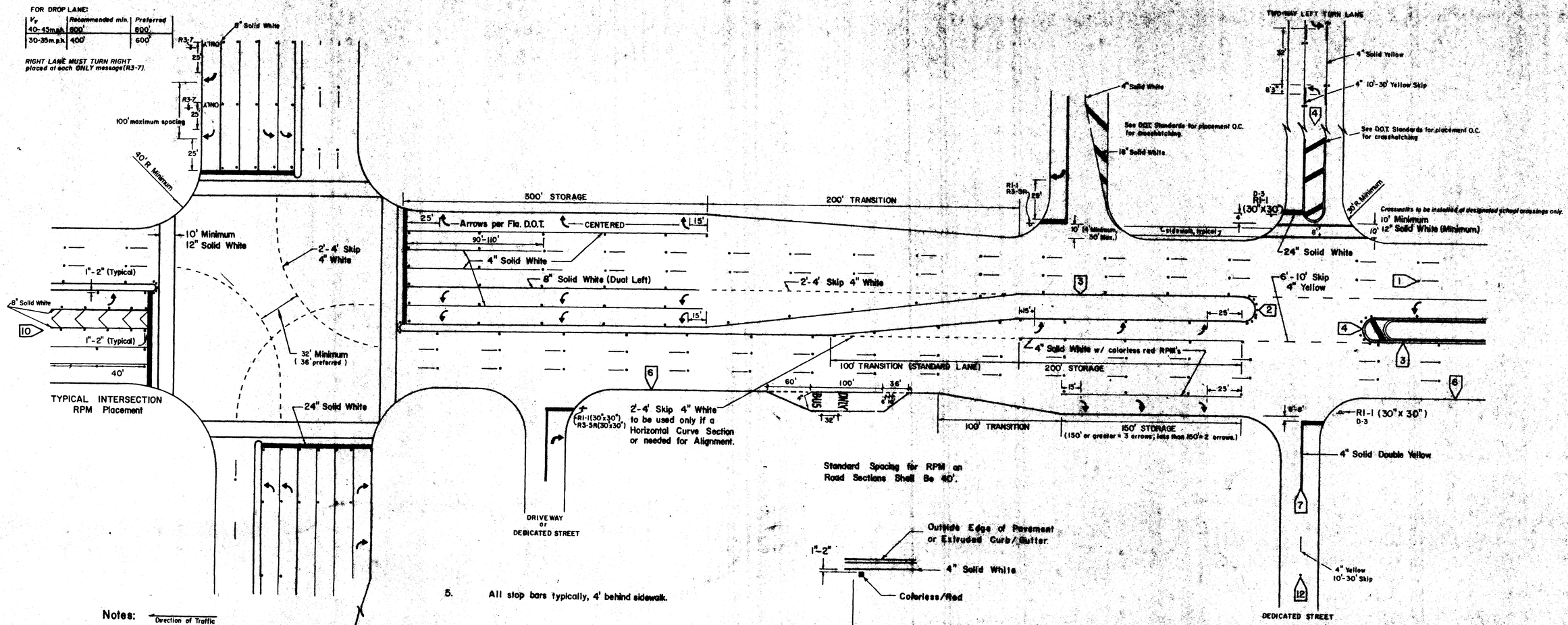

Notes:

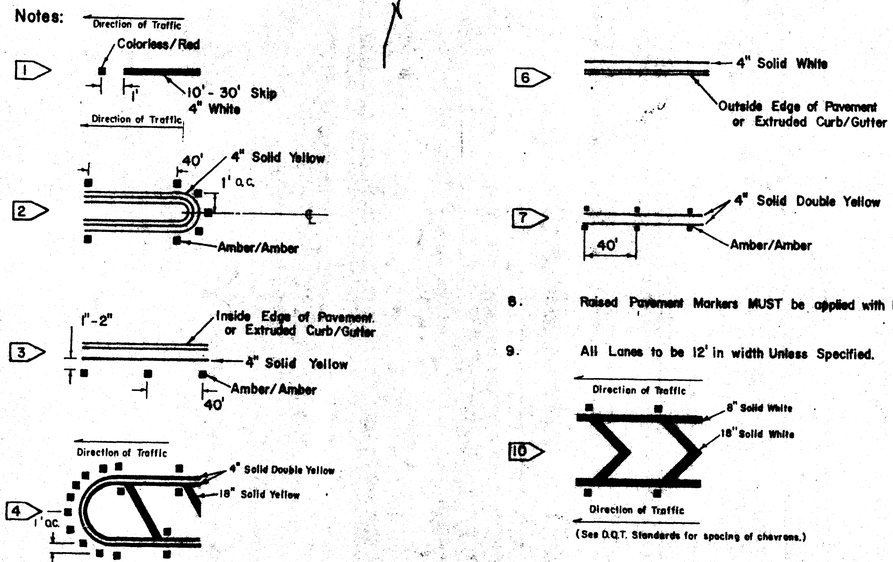

5. All stop bars typically, 4' behind sidewalk.

8. Raised Pavement Markers MUST be applied with EPOXY.

9. All Lanes to be 12' in width Unless Specified.

(See D.O.T. Standards for spacing of chevrons.)

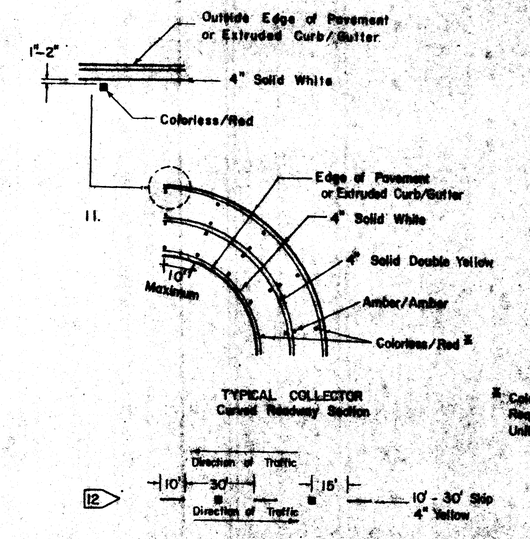

11. TYPICAL COLLECTOR
Curved Roadway Section

* Colorless/Red RPM's May be Required on Sharp Curves and/or Unlighted Sections of Road.

13.

All Pavement Markings and Signing Shall Be in Accordance with the "Manual on Uniform Traffic Control Devices for Streets and Highways", unless Specified otherwise.

BROWARD COUNTY TRAFFIC MARKING
STANDARD DETAIL

N.W. 15th. STREET
MINTO COMMUNITIES

WINNINGHAM & FRADLEY, INC.
ENGINEERS • PLANNERS • SURVEYOR

DESIGNED: WBF	DATE: 6-95	APPROVED:	
DRAWN: WBF	DATE: 8-95	PROJECT NUMBER: 94552	SHEET 3 OF 3
CHECKED:	DATE:		

NO.	REVISIONS	BY	DATE

SEP 13 1995