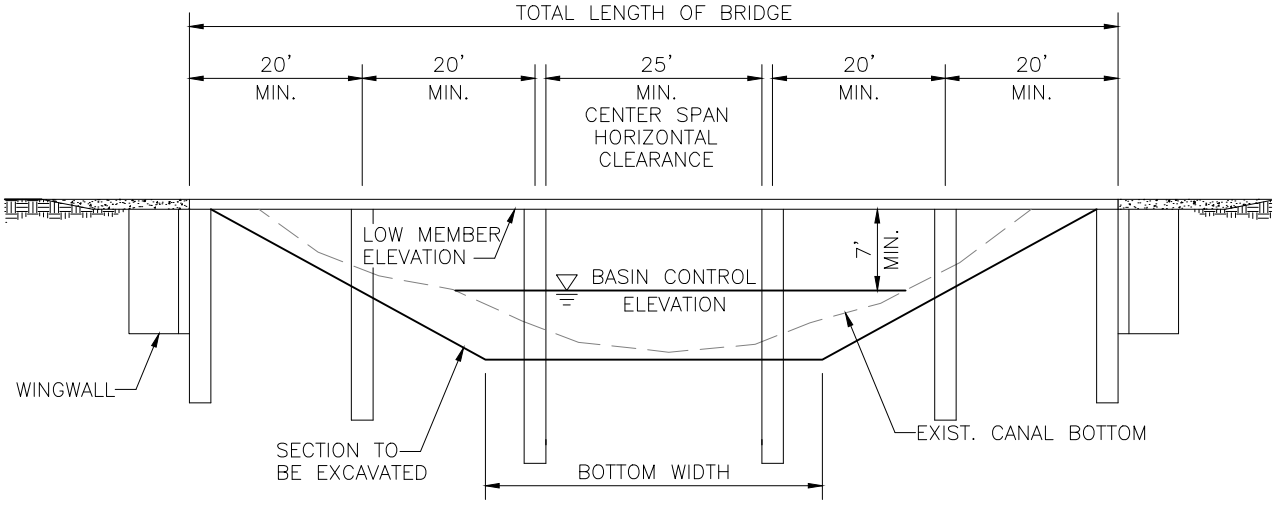

SECTION
N.T.S.

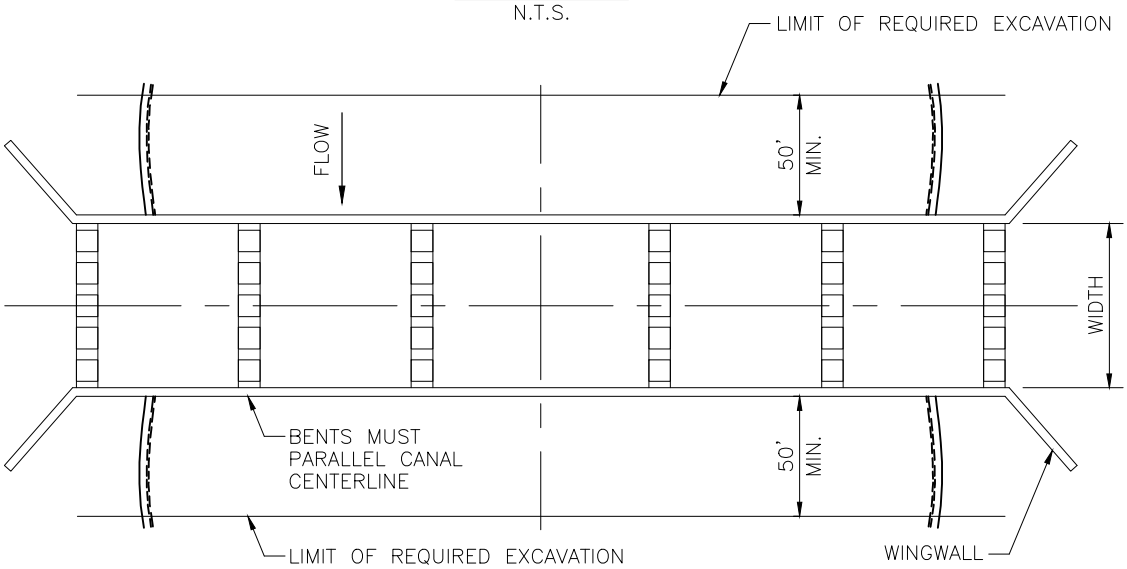

PLAN
N.T.S.

NOTES:

CANAL SECTION, LIMITS OF EXCAVATION & LENGTH OF TRANSITION TO EXISTING SECTION WILL BE FURNISHED BY THE APPLICANT WHEN APPLICABLE.

ALL ELEVATIONS MUST BE IN FT

SOUTH BROWARD DRAINGE DISTRICT
DESIGN CRITERIA MANUAL

BRIDGE CROSSING DETAIL

EXHIBIT TITLE

SEAL

EXHIBIT
35